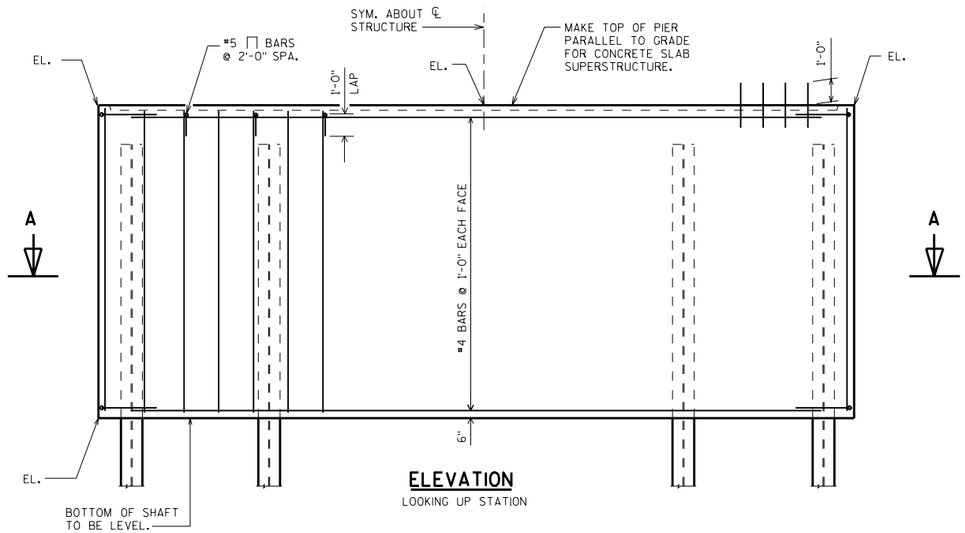

ELEVATION

LOOKING UP STATION

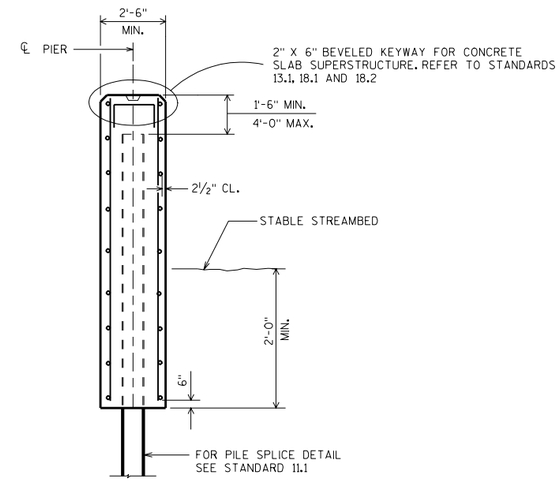

END VIEW

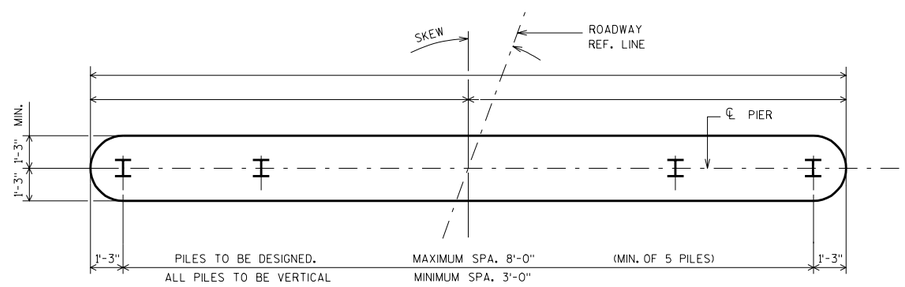

PLAN

STEEL PILING SHOWN. CAST IN PLACE
CONC. PILING LAYOUT SIMILAR.

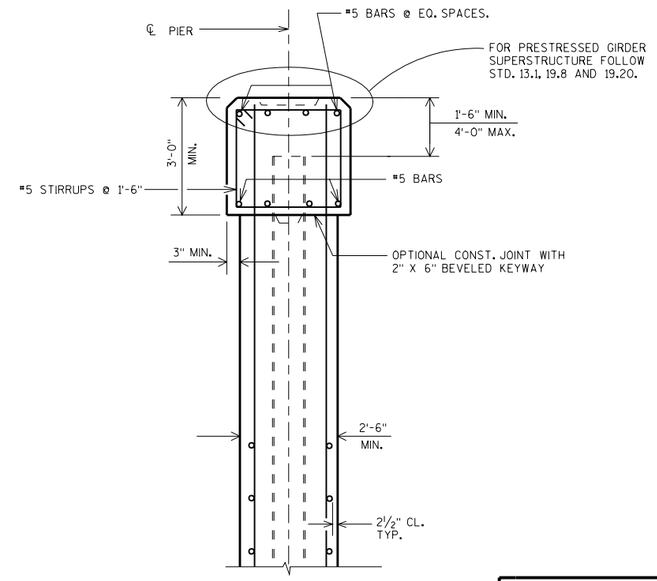

CAP TYPE DETAIL

USE WHEN ECONOMICAL FOR GIRDERS
ON LARGE SKEWS.

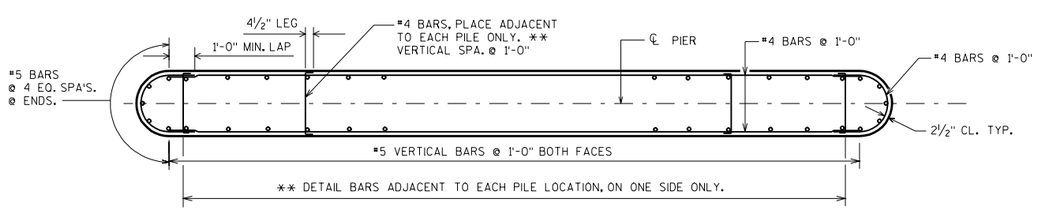

SECTION A

PILE ENCASED PIER

STATE OF WISCONSIN
DEPARTMENT OF TRANSPORTATION
STRUCTURES DEVELOPMENT SECTION

APPROVED: _____

DATE: 1/03