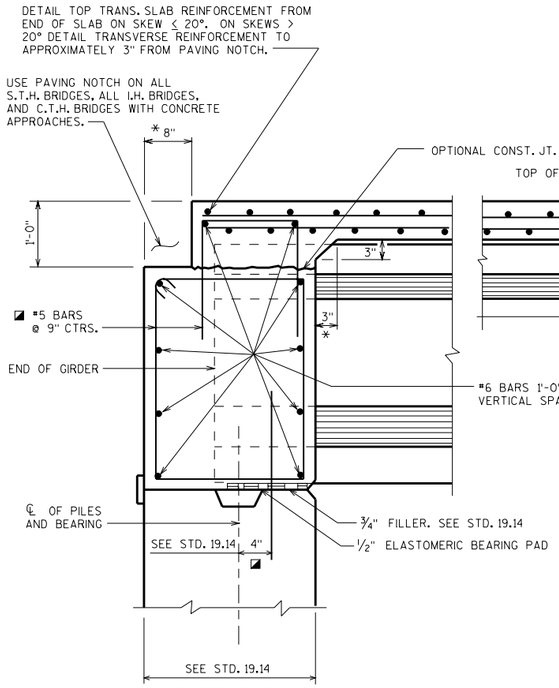

FIXED END
FOR SKEWED AND SQUARE STRUCTURES

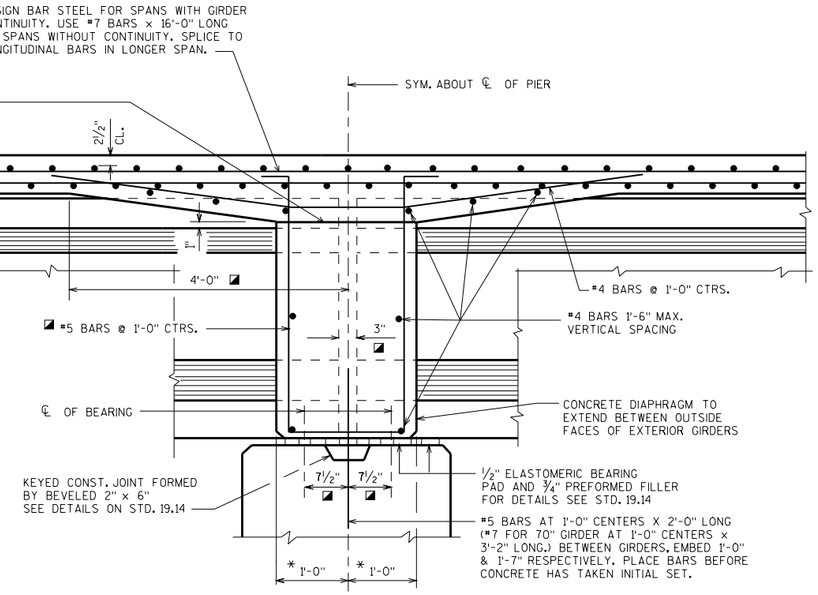

DIAPHRAGM AT ½" ELASTOMERIC BEARING

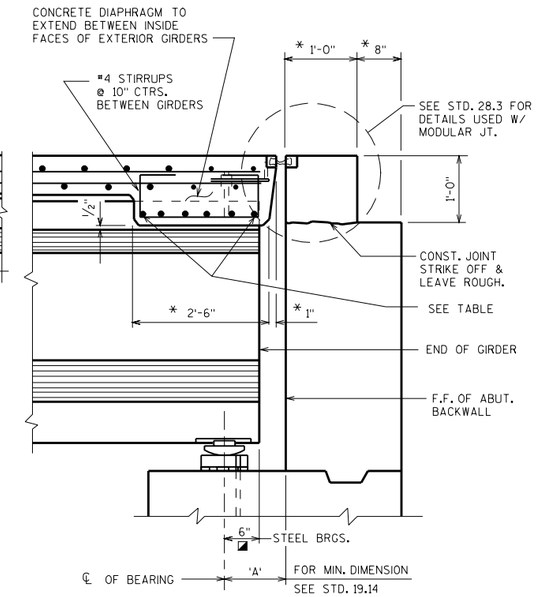

EXPANSION END

NOTE: FOR EXPANSION DEVICE DETAILS NOT SHOWN SEE STD. 28.1 FOR STRIP SEAL EXPANSION DEVICE.

SEE STD. 24.12 FOR TEMPORARY BRACING REQUIREMENT.

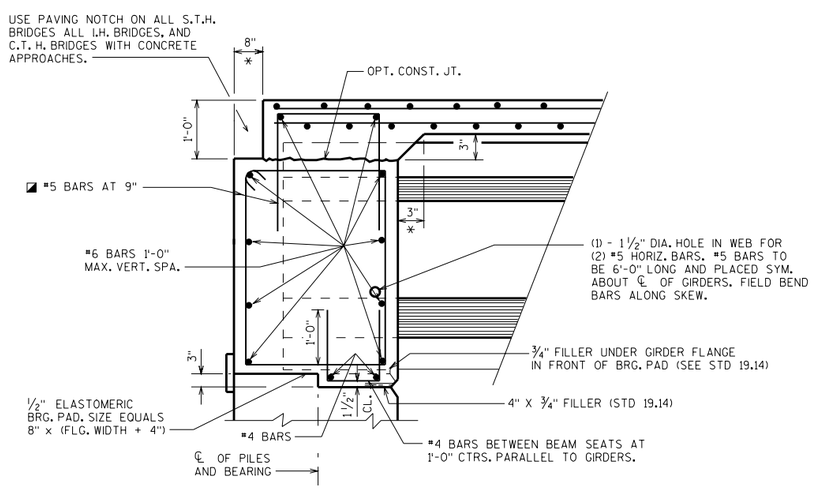

PRESTRESSED GIRDER WITH SEMI-EXPANSION SEAT

EXPANSION END DIAPHRAGM STEEL

DIAPHRAGM LENGTH BETWEEN GIRDERS (℄ TO ℄ OF GRDS.)	NO. OF BARS & BAR SIZE
≤ 8'-4"	6 - #6
> 8'-4" ≤ 11'-4"	6 - #7
> 11'-4" ≤ 15'-0"	6 - #8

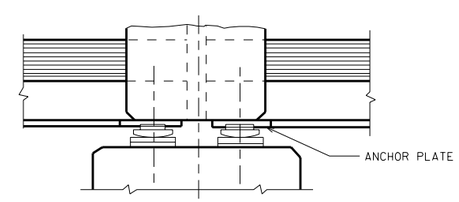

DIAPHRAGM AT STEEL OR ELASTOMERIC BEARINGS SECTION THRU HAUNCH AT PIER

NOTES

LAP LENGTHS FOR ALL BARS SHALL BE BASED ON A "CLASS C" TENSION LAP SPLICE.

LEGEND

◪ THESE DIMENSIONS PARALLEL TO GIRDER

* DIMENSION IS TAKEN NORMAL TO ℄ SUBSTRUCTURE UNITS.

SEE STANDARD 19.20 FOR 54W" & 72W" PRETENSIONED GIRDERS, SLAB & SUPERSTRUCTURE DETAILS.

PRETENSIONED GIRDERS SLAB & SUPERSTRUCTURE DETAILS

STATE OF WISCONSIN
DEPARTMENT OF TRANSPORTATION
STRUCTURES DEVELOPMENT SECTION

APPROVED: _____ DATE: 1-03