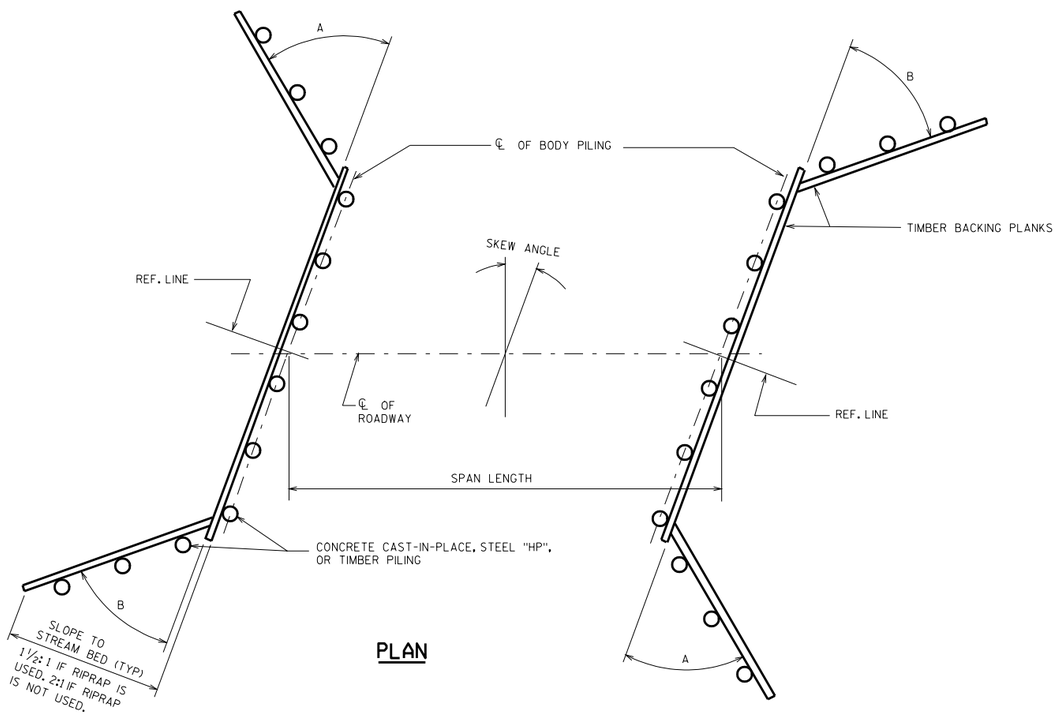

PLAN

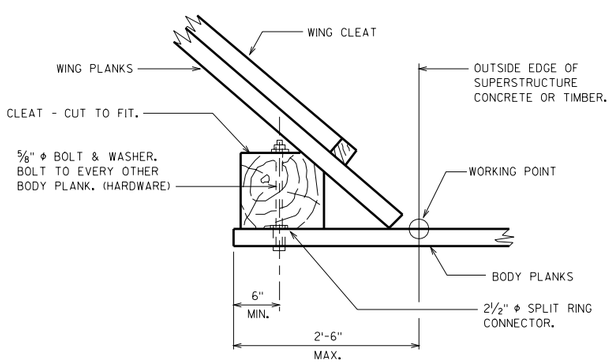

CORNER DETAIL

NOTES

ALL TIMBER CONNECTORS AND HARDWARE EXCEPT THOSE OF MALLEABLE IRON SHALL BE GALVANIZED.

TREAT ALL LUMBER AND TIMBER WITH ONE OF THE PRESERVATIVES RECOMMENDED IN THE CONSTRUCTION SPECIFICATIONS.

TIE RODS SHALL BE COATED WITH THE COAL TAR OR BITUMASTIC COMPOUND USED FOR COVERING WING PILE ENDS.

REFER TO A.A.S.H.T.O. SPECIFICATIONS FOR ALLOWABLE LUMBER AND TIMBER STRESSES.

THE BODY BACKING PLANKS SHALL BE CONTINUOUS OVER 4 PILES (3 PANELS). PLANK SPLICES, IF REQUIRED SHALL BE AT THE CENTERLINE OF PILING AND ADJACENT SPLICES SHALL BE STAGGERED.

ALL TIE RODS, TURNBUCKLES, NUTS AND WASHERS SHALL BE PAID FOR AS "STRUCTURAL CARBON STEEL".

TIMBER CONNECTORS AND HARDWARE SHALL BE INCLUDED IN THE COST FOR "TREATED LUMBER AND TIMBER".

ALTERNATE DETAILS MAY BE SUBMITTED USING EITHER GALVANIZED STEEL BRIDGE PLANK OR PRECAST CONCRETE PLANK IN LIEU OF TIMBER BACKED ABUTMENT PLANKING, SUBJECT TO APPROVAL BY THE ENGINEER.

SKEW ANGLE	"H" HEIGHT FROM STREAM BED OR BERM TO GRADE	WING ANGLE "A"	WING ANGLE "B"
0° TO 15° INCL.	H ≤ 10'-0"	45°	45°
0° TO 15° INCL.	* H > 10'-0"	50°	50°
15° TO 20° INCL.	H ≤ 10'-0"	55°	30°
15° TO 20° INCL.	* H > 10'-0"	50°	50°
OVER 20°	H ≤ 10'-0"	65°	25°
OVER 20°	● H > 10'-0"	65°	25°

* USE TIE RODS ON WING PILING

● USE TIE RODS WITH A DEADMAN ON WING PILING.

SECTION	MOMENT CAPACITY (INCH - KIPS/FT.)
3" TIMBER	21.6 (f_b = 1.2 K.S.I.)
4" TIMBER	38.4 (f_b = 1.2 K.S.I.)
10 GAGE (6' × 2') GRADE A * ARMCO	22.9 (f_b = 18 K.S.I.)
7 GAGE (6' × 2') GRADE A * ARMCO	30.0 (f_b = 18 K.S.I.)

*A.S.T.M. A446

TIMBER ABUTMENTS GENERAL

STATE OF WISCONSIN
DEPARTMENT OF TRANSPORTATION
STRUCTURES DEVELOPMENT SECTION

APPROVED: _____

DATE: 1/99