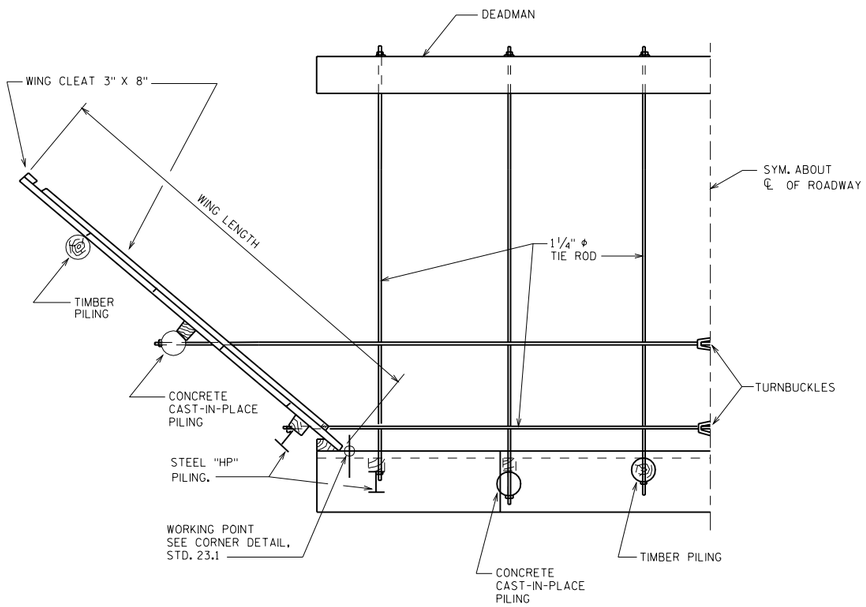

HALF PLAN

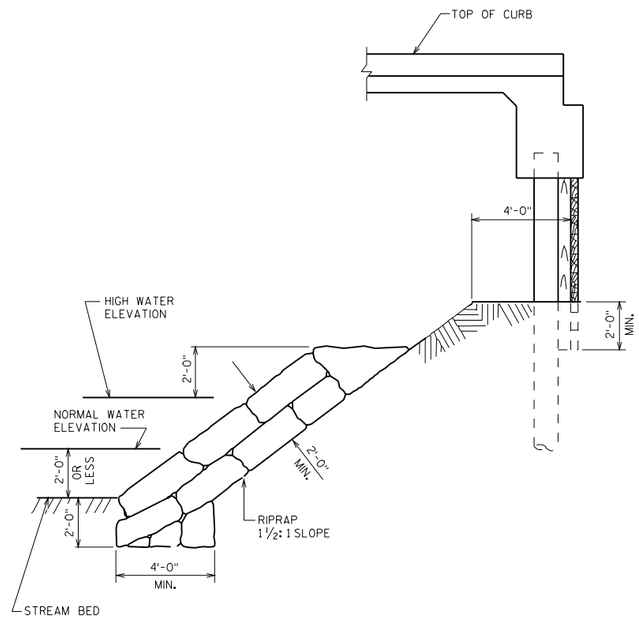

LONGITUDINAL SECTION WITH BERM

SHOWING TOE OF RIPRAP WHEN WATER IS 2'-0" OR LESS IN DEPTH.

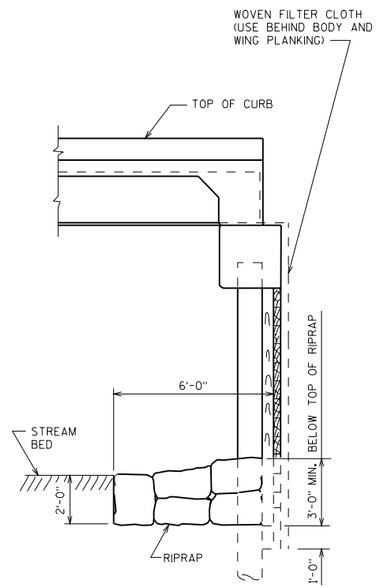

LONGITUDINAL SECTION WITHOUT BERM

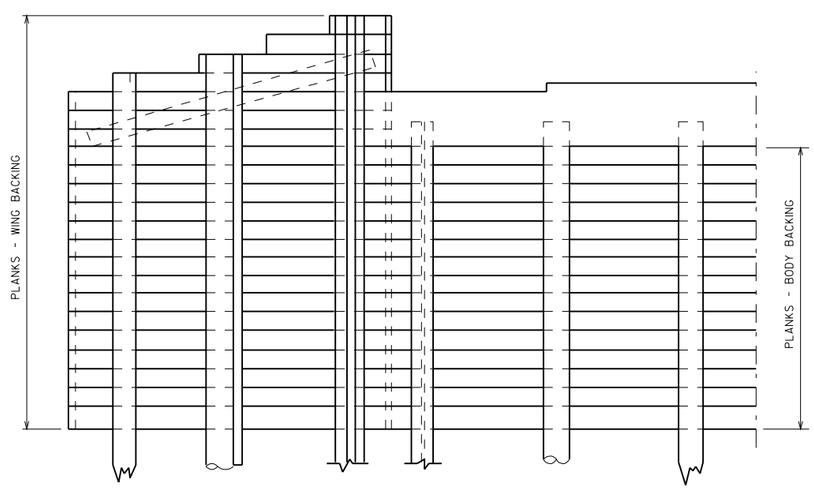

HALF ELEVATION

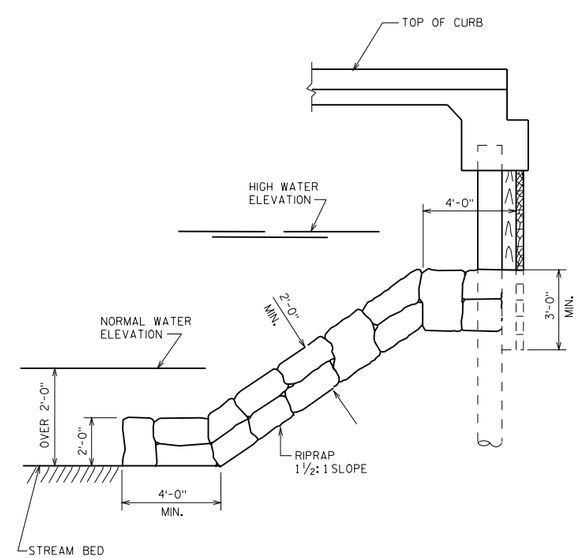

LONGITUDINAL SECTION WITH BERM

SHOWING TOE OF RIPRAP WHEN WATER IS OVER 2'-0" IN DEPTH.

TIMBER ABUTMENT

STATE OF WISCONSIN
DEPARTMENT OF TRANSPORTATION
STRUCTURES DEVELOPMENT SECTION

APPROVED: _____

DATE: 1/99