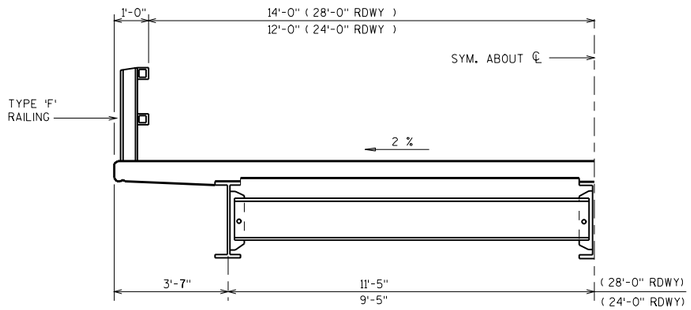

24'-0" & 28'-0" ROADWAY

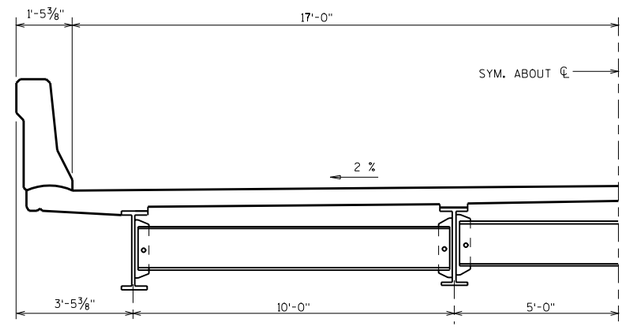

34'-0" ROADWAY

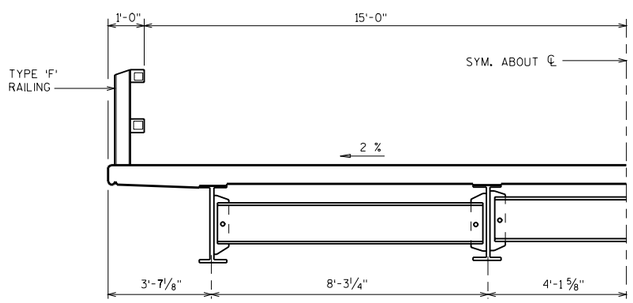

30'-0" ROADWAY

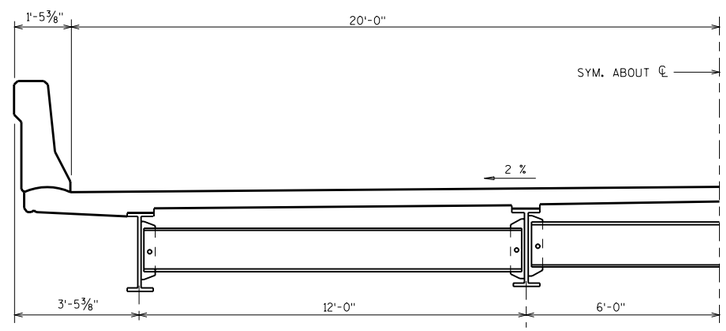

40'-0" ROADWAY

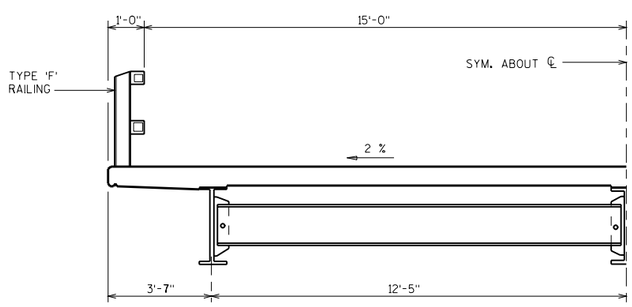

30'-0" ROADWAY

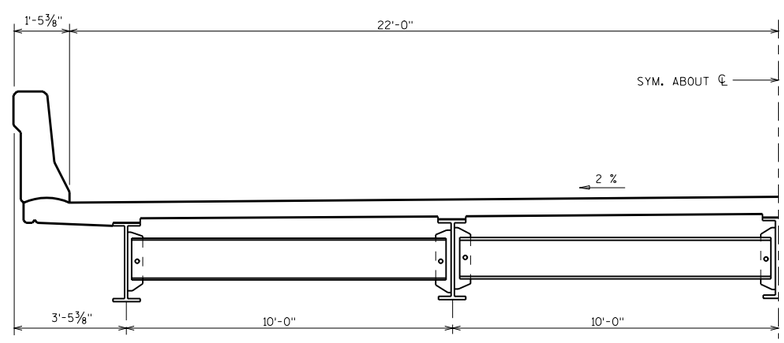

44'-0" ROADWAY

NOTES

GIRDER SPACINGS SHOWN MAY BE MODIFIED BY THE DESIGNER, IF OTHER SPACINGS RESULT IN A MORE ECONOMICAL SECTION.

SEE CHAPTER 17 IN THE BRIDGE MANUAL FOR DECK THICKNESS.

STEEL GIRDER SUPERSTRUCTURE SECTIONS	
STATE OF WISCONSIN DEPARTMENT OF TRANSPORTATION STRUCTURES DEVELOPMENT SECTION	
APPROVED: _____	DATE: 1/99