GIRDERS OF A709 GRADE 36 STEEL

SECTION		WEB SPLICE			FLANGE SPLICE				MOMENT CAPACITY OF SPLICE FT. KIPS.	WEIGHT OF SPLICE LBS.
		"N"	"S"	PLATE "A"	"Z"	"G"	PLATE "B"	PLATE "C"		
W 24	68	1	6	10½ X ⅜	3	5	8 X ⅜ X 1-8½	3 X ⅜ X 1-8½	180	122
	76	1	6	10½ X ⅜	3	5	8 X ⅜ X 1-8½	3 X ½ X 1-8½	205	131
	84	1	7	10½ X ⅜	4	5½	9 X ⅜ X 2-1½"	3½ X 7⁄16 X 2-1½	225	158
W 27	84	1	8	10½ X ⅜	4	5½	9 X ⅜ X 2-1½"	3½ X ⅜ X 2-1½"	245	159
	94	2	5	15½ X ⅜	4	5½	9 X ⅜ X 2-1½"	3½ X 9⁄16 X 2-1½	285	203
W 30	99	2	7	15½ X ⅜	4	5½	9 X ⅜ X 2-1½"	3½ X ½ X 2-1½	320	209
	108	2	7	15½ X ⅜	5	5½	9 X 7⁄16 X 2-6½	3½ X ½ X 2-6½	349	241
	116	2	7	15½ X ⅜	5	6	9½ X 7⁄16 X 2-6½	3½ X ⅝ X 2-6½	385	259
	124	2	7	15½ X ⅜	5	6½	10 X 7⁄16 X 2-6½	3½ X ¾ X 2-6½	425	279
	132	2	8	15½ X ⅜	6	6½	10 X ½ X 2-11½	3½ X ¾ X 2-11½	450	323
W 33	118	2	8	15½ X ⅜	5	6	10 X 7⁄16 X 2-6½	4 X ½ X 2-6½	440	269
	130	2	8	15½ X ⅜	5	6	10 X 7⁄16 X 2-6½	4 X ⅝ X 2-6½	480	286
	141	2	8	15½ X ⅜	6	7	11 X 7⁄16 X 2-11½	4 X ⅝ X 2-11½	515	324
	152	2	9	15½ X ⅜	7	7	11 X ½ X 3-4½	4 X ¾ X 3-4½	580	393
W 36	135	2	9	15½ X ⅜	6	7	11 X 7⁄16 X 2-11½	4 X ½ X 2-11½	530	314
	150	2	10	15½ X ⅜	7	7	11 X ½ X 3-4½	4 X ⅝ X 3-4½	600	381
	160	2	10	15½ X ⅜	7	7	11 X ½ X 3-4½	4 X ¾ X 3-4½	645	404
	170	2	11	15½ X ⅜	8	7	11 X 9⁄16 X 3-9½	4 X ¾ X 3-9½	690	458

GIRDERS OF A709 GRADE 50/A709 GRADE 50W STEEL

SECTION		WEB SPLICE			FLANGE SPLICE				MOMENT CAPACITY OF SPLICE FT. KIPS.	WEIGHT OF SPLICE LBS.
		"N"	"S"	PLATE "A"	"Z"	"G"	PLATE "B"	PLATE "C"		
W 24	68	2	6	15½ X ⅜	4	5	8½ X 7⁄16 X 2-1½	3½ X ½ X 2-1½	270	193
	76	2	6	15½ X ⅜	4	5	8½ X 7⁄16 X 2-1½	3½ X 9⁄16 X 2-1½	270	199
	84	2	6	15½ X ⅜	5	5	8½ X ½ X 2-6½	3½ X ½ X 2-6½	280	225
W 27	84	2	7	15½ X ⅜	5	5	8½ X ½ X 2-6½	3½ X 9⁄16 X 2-6½	330	245
	94	2	8	15½ X ⅜	6	5½	9 X 9⁄16 X 2-11½	3½ X ⅝ X 2-11½	380	297
W 30	99	2	9	15½ X 7⁄16	6	6	9½ X ½ X 2-11½	3½ X ⅝ X 2-11½	430	316
	108	3	7	20½ X 7⁄16	6	6½	10 X ½ X 2-11½	3½ X ¾ X 2-11½	480	371
	116	3	7	20½ X 7⁄16	7	6½	10 X 9⁄16 X 3-4½	3½ X ¾ X 3-4½	510	417
	124	3	7	20½ X 7⁄16	7	6	10 X 9⁄16 X 3-4½	4 X ¾ X 3-4½	550	433
	132	3	8	20½ X 7⁄16	8	6	10 X ⅝ X 3-9½	4 X ¾ X 3-9½	580	488
W 33	118	3	8	20½ X 7⁄16	7	7	11 X ½ X 3-4½	4 X ⅝ X 3-4½	570	426
	130	3	8	20½ X 7⁄16	8	7	11 X ⅝ X 3-9½	4 X ⅝ X 3-9½	640	494
	141	3	9	20½ X 7⁄16	9	6½	11 X ⅝ X 4-2½	4½ X ¾ X 4-2½	715	583
	152	3	9	20½ X 7⁄16	10	6½	11 X ⅝ X 4-7½	4½ X ⅞ X 4-7½	765	659
W 36	135	3	10	20½ X 7⁄16	8	6½	11 X 9⁄16 X 3-9½	4½ X ⅝ X 3-9½	715	509
	150	3	10	20½ X 7⁄16	9	6½	11 X ⅝ X 4-2½	4½ X ¾ X 4-2½	805	598
	160	3	11	20½ X ½	10	6½	11 X ⅝ X 4-7½	4½ X ⅞ X 4-7½	855	676
	170	3	11	20½ X 9⁄16	11	6½	11 X ¾ X 5-0½	4½ X ⅞ X 5-0½	930	768

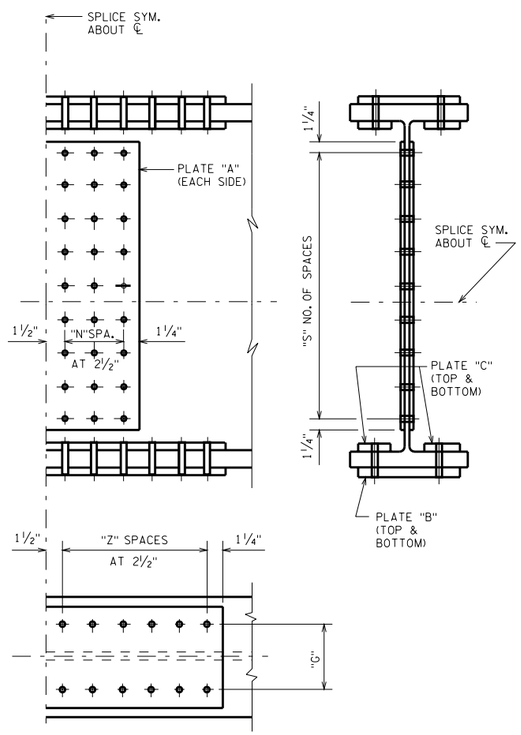

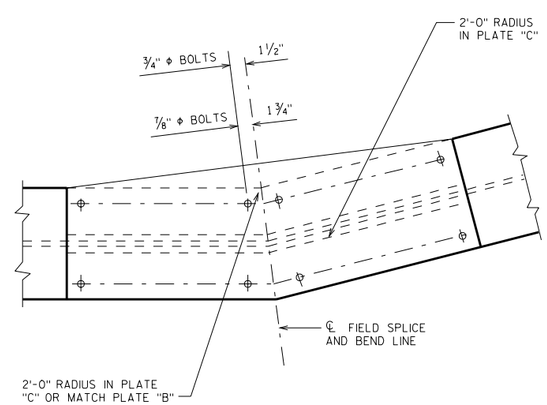

SPLICE DETAIL FOR KINKED GIRDERS

DESIGN CRITERIA

THE SPLICE IS DESIGNED WITH A CAPACITY OF 80% OF THE STRENGTH OF THE NET SECTION OF THE SMALLER MEMBER BEING JOINED. CHECK MOMENT CAPACITY OF SPLICE WITH EXISTING CONDITIONS.

THE NET SECTION IS TAKEN THRU THE GIRDER WHERE ONLY THE FLANGE CONNECTORS OCCUR. THE SHEAR CAPACITY IS BASED ON THE "T" DEPTH AS GIVEN IN THE A.I.S.C. HANDBOOK.

ALL SPLICE DESIGNS ARE BASED ON ¾" ϕ HIGH STRENGTH BOLTS IN A CONNECTION.

ALL SPLICE PLATES ARE MADE OF STEEL CONFORMING TO A.S.T.M. SPECIFICATIONS FOR A709 GRADE 36.

THE ALLOWABLE STRESSES USED IN THE DESIGN ASSUMING NO ALTERNATING STRESSES (A.A.S.H.T.O. LOADING COND. NO. 1) ARE:

	A709 GRADE 36	A709 GRADE 50/A709 GRADE 50W
BENDING:	20,000 p.s.i.	27,000 p.s.i.
SHEAR:	12,000 p.s.i.	17,000 p.s.i.

THESE STRESSES ARE APPLIED TO ALL SECTIONS REGARDLESS OF THICKNESS

ROLLED GIRDER SPLICE DETAILS

STATE OF WISCONSIN
DEPARTMENT OF TRANSPORTATION
STRUCTURES DEVELOPMENT SECTION

APPROVED: _____ DATE: 1/99