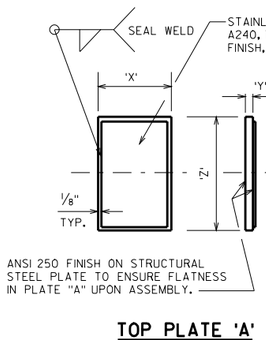

TOP PLATE 'A'

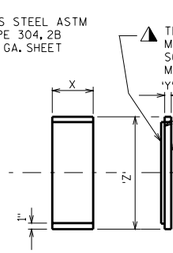

TEFLON COATED PLATE 'B'

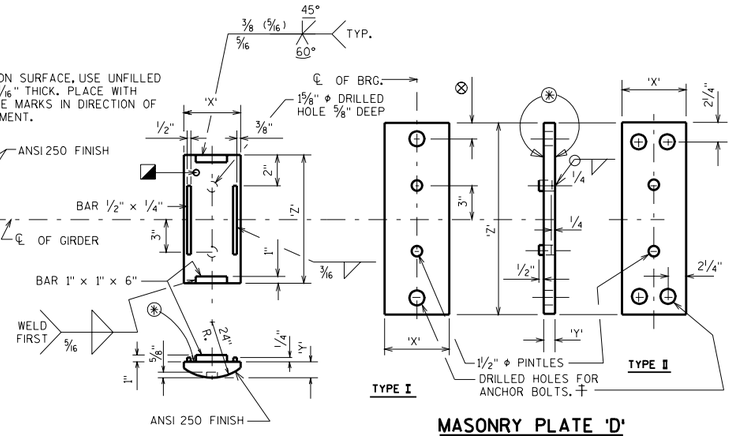

ROCKER PLATE 'C'

MASONRY PLATE 'D'

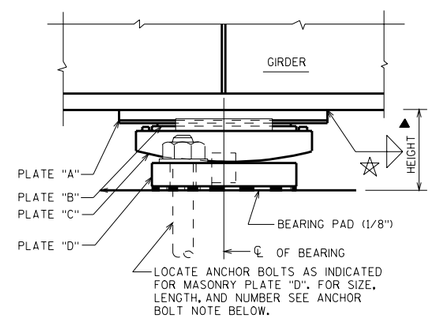

EXPANSION BEARING ASSEMBLY

NOTES

FOR BEARING NOTES, CLEARANCE DIAGRAM, AND WHEN TO BEVEL ROCKER PLATES, SEE STANDARD 27.2.

⊗ FINISH THESE SURFACES ANSI 250 IF DIMENSION "Y" IS GREATER THAN 2".

ANCHOR BOLTS, NUTS AND WASHERS SHALL BE GALVANIZED AS REQUIRED BY ASTM DESIGNATION A153, CLASS "C". PLATE "C" & "D" SHALL BE GALVANIZED. FOR UNPAINTED STRUCTURES PLATE "C" & "D" SHALL BE SHOP PAINTED AFTER GALVANIZING. PLATE "A" & "B" SHALL BE SHOP PAINTED. USE WELDABLE PRIMER ON PLATE "A".

AT ABUTMENTS WHEN THE "X" DIMENSION OF PLATE "A" EXCEEDS 11" INCREASE STANDARD DISTANCE FROM ℄ BRG. TO END OF GIRDER.

ALL MATERIAL INCLUDING SHIMS, BUT EXCLUDING STAINLESS STEEL SHEET, TEFLON SURFACE, PINTLES, ANCHOR BOLTS, NUTS AND WASHERS SHALL CONFORM TO ASTM A709 GRADE 50W.

☆ WELD SIZE, REFER TO STANDARD 24.2.

▲ ADJUST HEIGHT IF TAPERED BEARINGS ARE REQUIRED.

FABRICATOR MAY INCREASE PLATE "A" OR PLATE "D" THICKNESS AS AN ALTERNATE TO SHIMS.

⊗ DIMENSION IS 2" WHEN 1 1/4" Φ ANCHOR BOLTS ARE USED AND 2 1/4" WHEN 1 1/2" Φ ANCHOR BOLTS ARE USED.

ALL MATERIALS IN TYPE "A-T" BEARINGS, INCLUDING SHIMS, SHALL BE PAID FOR AT THE UNIT PRICE BID FOR "EXPANSION BEARING ASSEMBLIES".

10" BEARING

CAP. KIPS	PLATE A			PLATE B			PLATE C			PLATE D			HEIGHT FEET
	X	Y	Z	X	Y	Z	X	Y	Z	X	Y	Z	
80	9"	5/8"	10 "	5"	1/2"	10"	7"	1 7/16"	1'-0 1/4"	8"	1 1/2"	1'-8"	.360
145	1'-1"	5/8"	10"	9"	1/2"	10"	11"	2 3/8"	1'-0 1/4"	8"	1 1/2"	1'-8"	.438
205	1'-5"	5/8"	10"	1'-1"	1/2"	10"	1'-3"	3 7/8"	1'-0 1/4"	11"	2"	1'-8"	.604

12" BEARING

CAP. KIPS	PLATE A			PLATE B			PLATE C			PLATE D			HEIGHT FEET
	X	Y	Z	X	Y	Z	X	Y	Z	X	Y	Z	
100	9"	5/8"	1'-0"	5"	1/2"	1'-0"	7"	1 7/16"	1'-2 1/4"	8"	1 1/2"	1'-10"	.360
140	11"	5/8"	1'-0"	7"	1/2"	1'-0"	9"	1 5/16 "	1'-2 1/4"	8"	1 1/2"	1'-10"	.401
220	1'-3"	5/8"	1'-0"	11"	1/2"	1'-0"	1'-1"	2 7/8"	1'-2 1/4"	11"	2"	1'-10"	.521

14" BEARING

CAP. KIPS	PLATE A			PLATE B			PLATE C			PLATE D			HEIGHT FEET
	X	Y	Z	X	Y	Z	X	Y	Z	X	Y	Z	
170	11"	5/8"	1'-2"	7"	1/2"	1'-2"	9"	1 5/16 "	1'-4 1/4"	8"	1 1/2"	2'-0"	.401
310	1'-5"	5/8"	1'-2"	1'-1"	1/2"	1'-2"	1'-3"	3 7/8"	1'-4 1/4"	1'-2"	2 3/8"	2'-0"	.635
405	1'-9"	5/8"	1'-2"	1'-5"	1/2"	1'-2"	1'-7"	4 7/8"	1'-4 1/4"	1'-5"	2 7/8"	2'-1"	.760

▲ BOND STEEL AND TEFLON WITH ADHESIVE MATERIAL MEETING FED. SPEC. MMM-A-134, FEP FILM OR EQUAL.

◪ PROVIDE A METHOD FOR HANDLING PLATE "C" DURING GALVANIZING.

16" BEARING

CAP. KIPS	PLATE A			PLATE B			PLATE C			PLATE D			HEIGHT FEET
	X	Y	Z	X	Y	Z	X	Y	Z	X	Y	Z	
195	11"	5/8"	1'-4"	7"	1/2"	1'-4"	9"	1 5/16 "	1'-6 1/4"	8"	1 1/2"	2'-2"	.401
305	1'-3"	5/8"	1'-4"	11"	1/2"	1'-4"	1'-1"	2 7/8"	1'-6 1/4"	1'-0"	2"	2'-3"	.521
420	1'-7"	5/8"	1'-4"	1'-3"	1/2"	1'-4"	1'-5"	3 7/8"	1'-6 1/4"	1'-4"	2 7/8"	2'-3"	.677
475	1'-9"	5/8"	1'-4"	1'-5"	1/2"	1'-4"	1'-7"	4 7/8"	1'-6 1/4"	1'-6"	3 7/8"	2'-3"	.844

18" BEARING

CAP. KIPS	PLATE A			PLATE B			PLATE C			PLATE D			HEIGHT FEET
	X	Y	Z	X	Y	Z	X	Y	Z	X	Y	Z	
225	11"	5/8"	1'-6"	7"	1/2"	1'-6"	9"	1 5/16 "	1'-8 1/4"	9"	1 1/2"	2'-4"	.401
285	1'-1"	5/8"	1'-6"	9"	1/2"	1'-6"	11"	2 3/8"	1'-8 1/4"	11"	2"	2'-4"	.479
480	1'-7"	5/8"	1'-6"	1'-3"	1/2"	1'-6"	1'-5"	3 7/8"	1'-8 1/4"	1'-5"	2 7/8"	2'-5"	.677
605	1'-11"	5/8"	1'-6"	1'-7"	1/2"	1'-6"	1'-9"	4 7/8"	1'-8 1/4"	1'-10"	3 7/8"	2'-5"	.844

20" BEARING

CAP. KIPS	PLATE A			PLATE B			PLATE C			PLATE D			HEIGHT FEET
	X	Y	Z	X	Y	Z	X	Y	Z	X	Y	Z	
180	9"	5/8"	1'-8"	5"	1/2"	1'-8"	7"	1 7/16"	1'-10 1/4"	8"	1 1/2"	2'-6"	.360
250	11"	5/8"	1'-8"	7"	1/2"	1'-8"	9"	1 5/16 "	1'-10 1/4"	9"	1 1/2"	2'-6"	.401
395	1'-3"	5/8"	1'-8"	11"	1/2"	1'-8"	1'-1"	2 7/8"	1'-10 1/4"	1'-1"	2 3/8"	2'-7"	.552
540	1'-7"	5/8"	1'-8"	1'-3"	1/2"	1'-8"	1'-5"	3 7/8"	1'-10 1/4"	1'-6"	3 7/8"	2'-7"	.760
685	1'-11"	5/8"	1'-8"	1'-7"	1/2"	1'-8"	1'-9"	4 7/8"	1'-10 1/4"	1'-11"	3 7/8"	2'-7"	.844

ANCHOR BOLT NOTES

FOR SPAN LENGTHS UP TO 100'-0", USE A TYPE I MASONRY PLATE "D" WITH 2 - 1 1/4" Φ × 1'-5" LONG ANCHOR BOLTS.

FOR SPAN LENGTHS FROM 100'-0" UP TO 150'-0", USE A TYPE II MASONRY PLATE "D" WITH 2 - 1 1/2"Φ X 1'-10" LONG ANCHOR BOLTS.

FOR SPAN LENGTHS GREATER THAN 150'-0", USE A TYPE III MASONRY PLATE "D" WITH 4 - 1 1/2"Φ X 1'-10" LONG ANCHOR BOLTS.

✝ DRILLED HOLES FOR ANCHOR BOLTS IN MASONRY PLATE "D" SHALL HAVE A DIAMETER 3/8" LARGER THAN ANCHOR BOLT.

STAINLESS STEEL - TFE EXPANSION BEARING DETAILS TYPE "A-T"

STATE OF WISCONSIN
DEPARTMENT OF TRANSPORTATION
STRUCTURES DEVELOPMENT SECTION

APPROVED: _____ DATE: 1/99