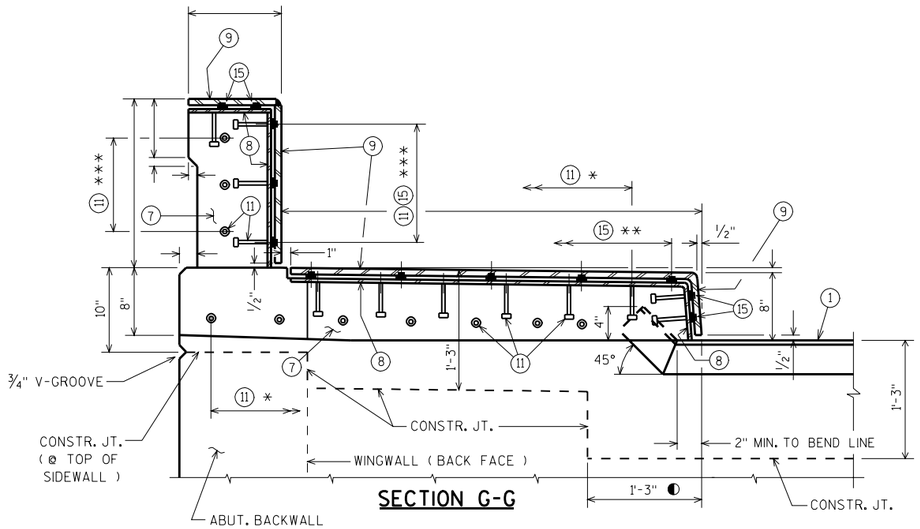


SECTION G-G

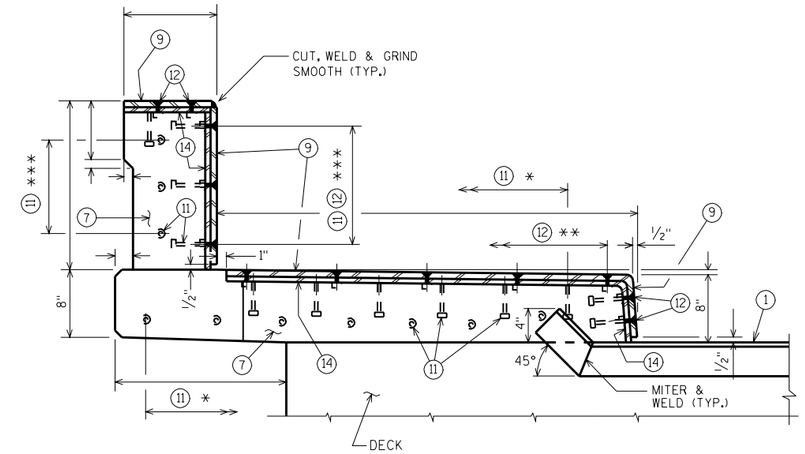


SECTION K-K

* 6" MAX. SPA.

** 1'-0" MAX. SPA.

*** 2 SPA. (1'-8" PARA. HEIGHT)
4 SPA. (2'-8" PARA. HEIGHT)

◐ PERPENDICULAR TO FACE OF CURB

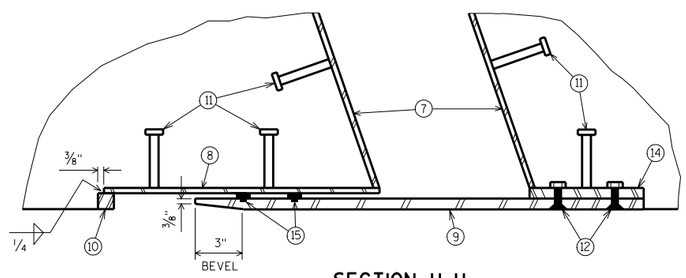


SECTION H-H

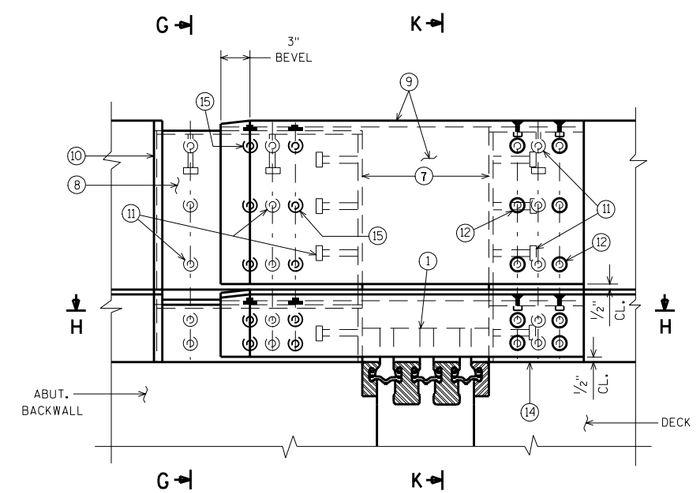


ELEVATION OF SIDEWALK W/ PARAPET

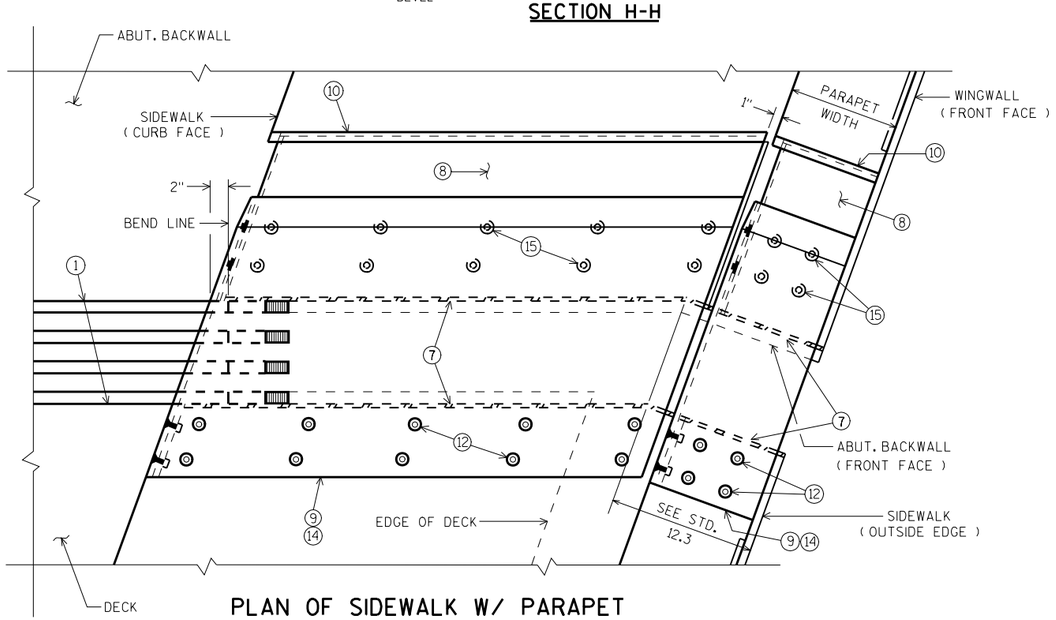


PLAN OF SIDEWALK W/ PARAPET

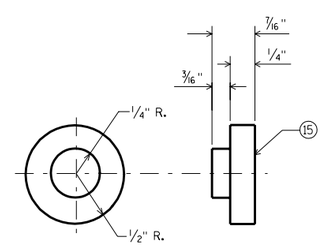


ADIPRENE BUTTON DETAIL

← DIRECTION OF TRAFFIC
DETERMINES THE ORIENTATION OF PLATES (9) & (10)

| COVER PLATES FOR SIDEWALK W/ CONC. PARA. | |
|---|---|
| STATE OF WISCONSIN<br>DEPARTMENT OF TRANSPORTATION<br>STRUCTURES DEVELOPMENT SECTION | |
| APPROVED: | DATE: 1-02 |

STANDARD 28.4