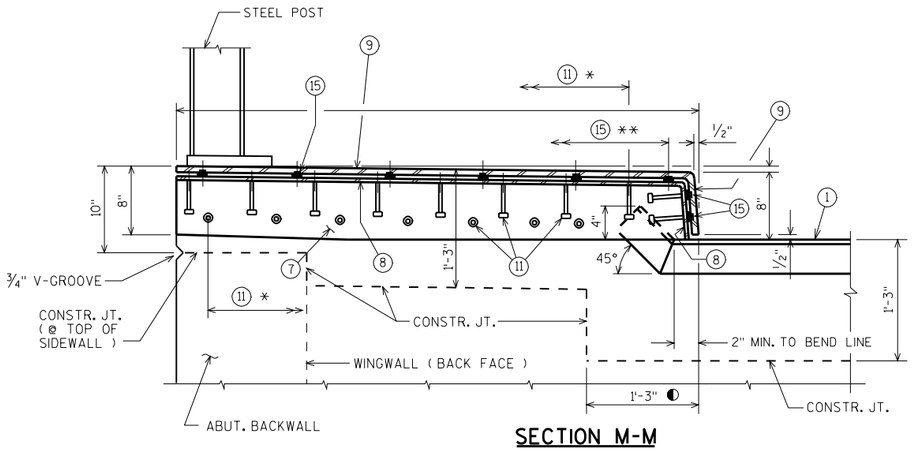

SECTION M-M

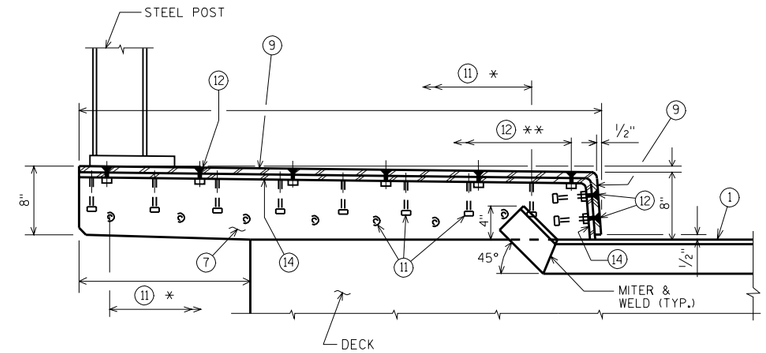

SECTION N-N

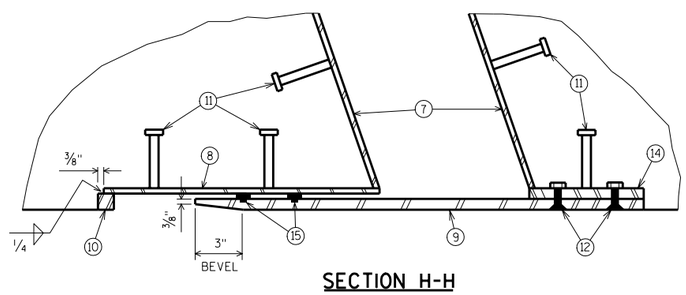

SECTION H-H

* 6" MAX. SPA.

** 1'-0" MAX. SPA.

◐ PERPENDICULAR TO FACE OF CURB

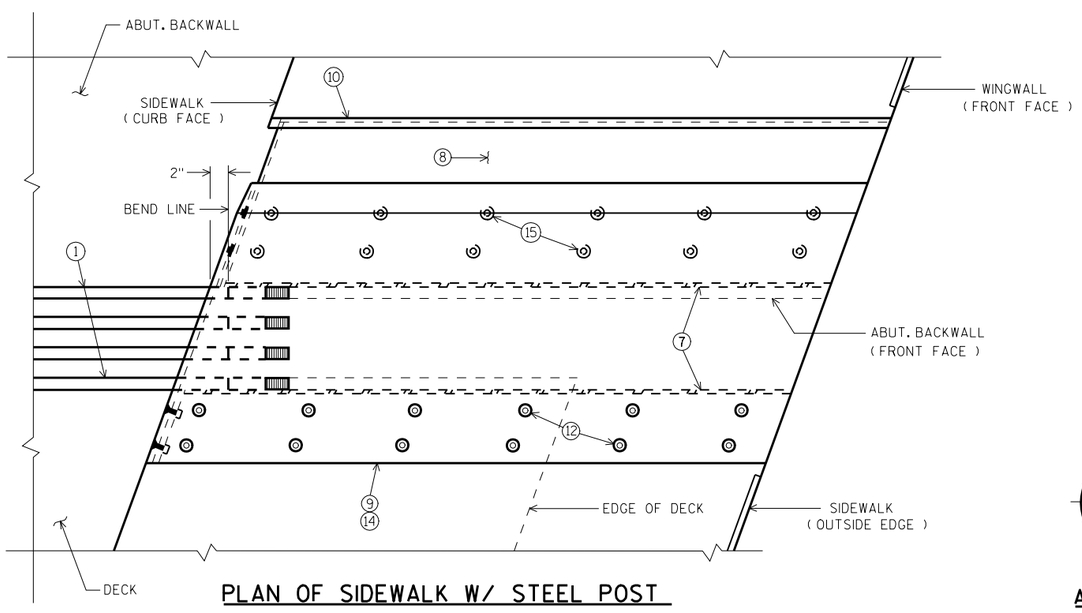

PLAN OF SIDEWALK W/ STEEL POST

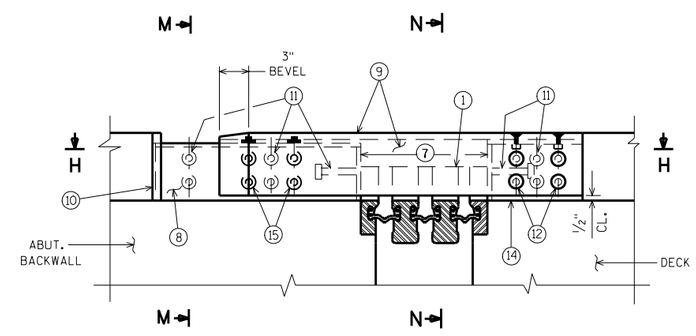

ELEVATION OF SIDEWALK W/ STEEL POST

← DIRECTION OF TRAFFIC
DETERMINES THE ORIENTATION
OF PLATES (9) & (10)

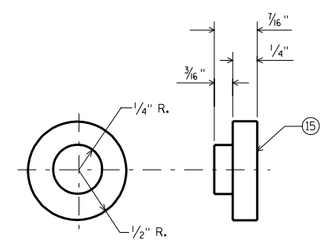

ADIPRENE BUTTON DETAIL

COVER PLATES FOR SIDEWALK W/ STEEL RAIL	
STATE OF WISCONSIN DEPARTMENT OF TRANSPORTATION STRUCTURES DEVELOPMENT SECTION	
APPROVED: _____	DATE: 1-02

STANDARD 28.6