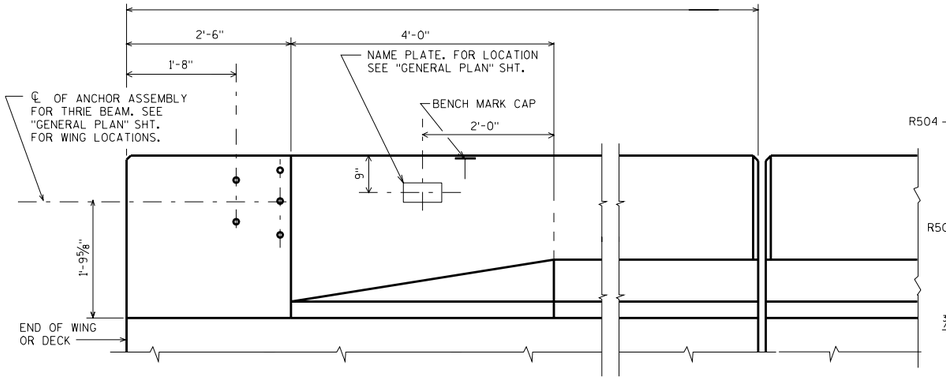


INSIDE ELEVATION

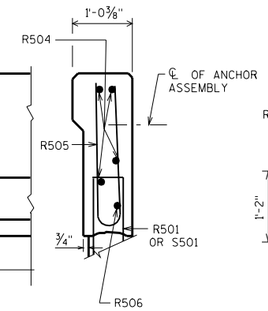


SECTION A

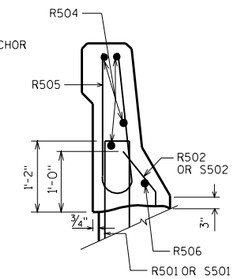


SECTION B

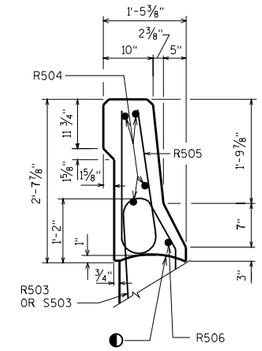


SECTION C

## BILL OF BARS

FOR ABUTMENT PARAPETS

| BAR MARK | COAT | ABUT. | ABUT. | LENGTH | BENT | LOCATION |
|---|---|---|---|---|---|---|
| R501 | X | | | 4'-7" | X | PARAPET VERT. |
| R502 | X | | | 2'-4" | X | PARAPET VERT. |
| R503 | X | | | 4'-6" | X | PARAPET VERT. |
| R504 | X | | | | | PARAPET HORIZ. |
| R505 | X | | | 4'-10" | X | PARAPET VERT. |
| R506 | X | | | | X | PARAPET HORIZ. |
| | | | | | | |
| | | | | | | |
| | | | | | | |
| | | | | | | |
| | | | | | | |
| | | | | | | |
| S501 | X | | | 4'-5" | X | PARAPET VERT. |
| S502 | X | | | 2'-4" | X | PARAPET VERT. |
| S503 | X | | | 4'-2" | X | PARAPET VERT. |

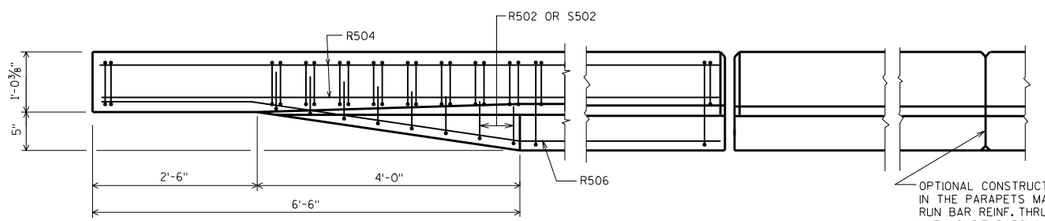


PLAN

EXPANSION JOINT @ ABUT.

0° SKEW SHOWN. MATCH EXP. JT. OPENING.

FOR TYPE A1 ABUT., USE ½" FILLER TO TOP OF PARAPET. SEE STD. 12.1.

OPTIONAL CONSTRUCTION JOINTS IN THE PARAPETS MAY BE USED. RUN BAR REINF. THRU THE JOINT. LAP LONGIT. BARS A MIN. OF 1'-9". MIN. JOINT SPACING OF 80'-0". DEFINE CONST. JOINT WITH A ¾" - 'V' GROOVE.

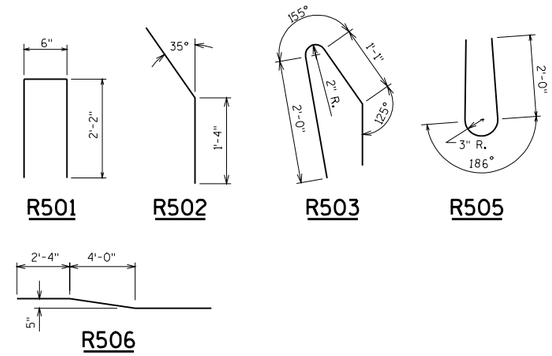


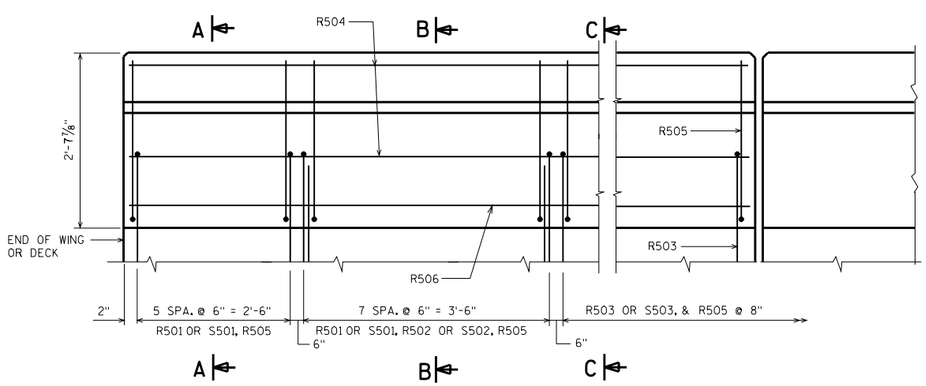


OUTSIDE ELEVATION

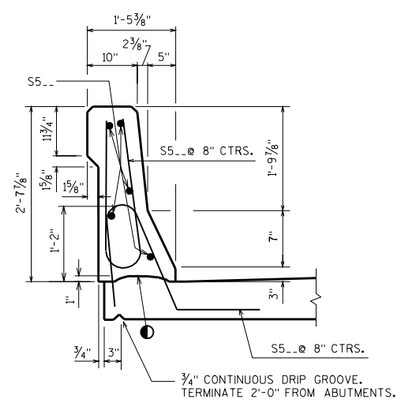


SECTION THRU PARAPET ON BRIDGE

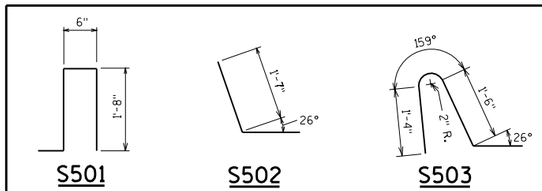


BARS FOR TRANSITION ON BRIDGE

AREA = 2.58 FT.$^2$
WEIGHT = 387 LBS./FT.

◐ CONST. JOINT - STRIKE OFF AS SHOWN.

SLOPED FACE PARAPET 'LF'

STATE OF WISCONSIN
DEPARTMENT OF TRANSPORTATION
STRUCTURES DEVELOPMENT SECTION

APPROVED: _____ DATE: 1/03

STANDARD 30.12