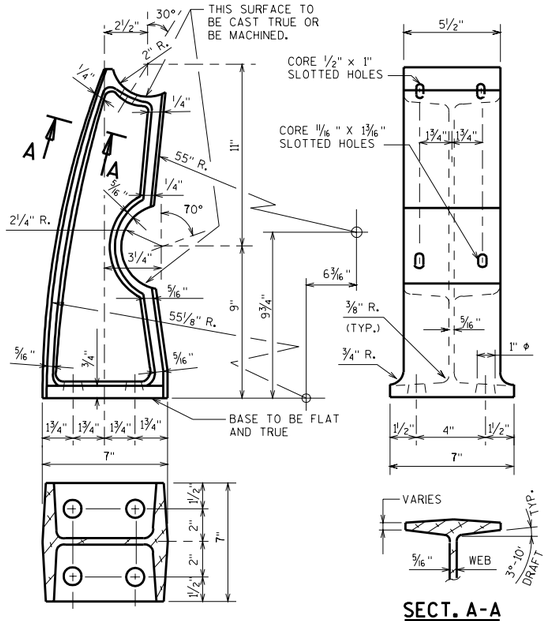

ALUMINUM POST CASTING

SECT. A-A

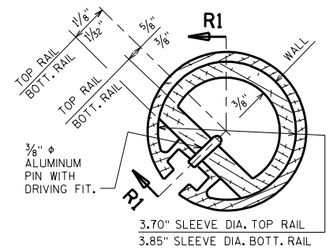

RAIL SPLICE DETAIL

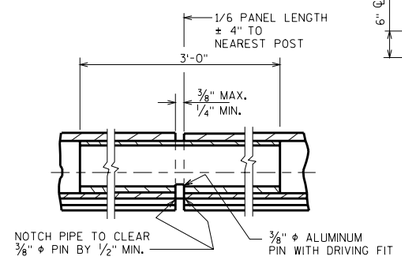

SECTION R1

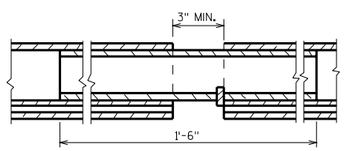

SLEEVE DETAIL AT ABUTMENT

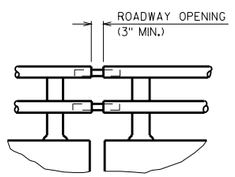

DETAIL AT RAIL OPENINGS

ALL SLEEVE DETAILS SAME AS "RAIL SPLICE DETAIL" UNLESS SHOWN OTHERWISE

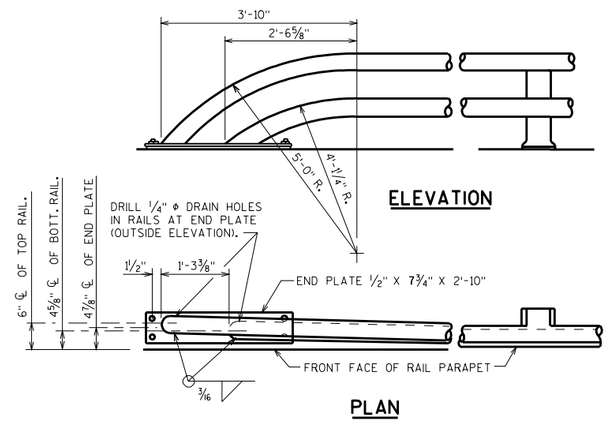

DETAIL OF RAIL BEND AT ABUTMENTS

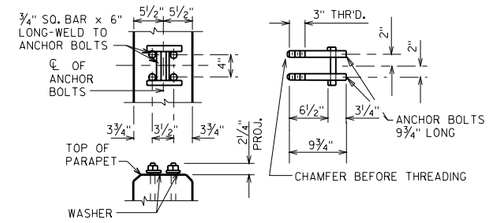

ANCHOR BOLTS AT POSTS

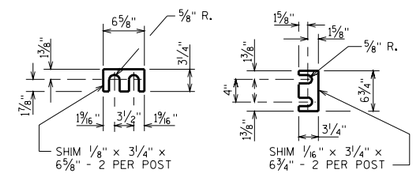

POST SHIM DETAILS

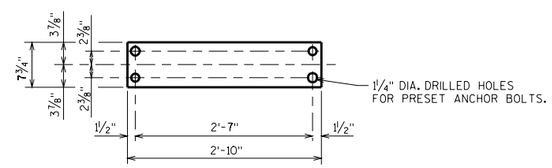

END PLATE

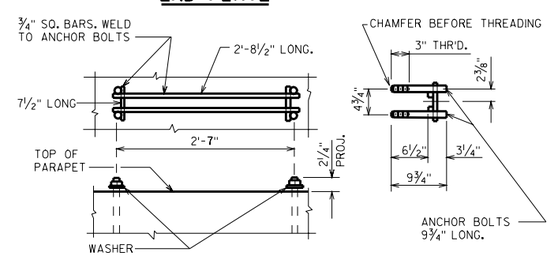

ANCHOR BOLTS AT END PLATE

GENERAL NOTES

BID ITEM SHALL BE TUBULAR RAILING, TYPE "H" WHICH INCLUDES ALL ITEMS SHOWN.

THE SHANK AND ROOT DIAMETER OF THREAD FOR ANCHOR BOLTS SHALL BE A MIN. OF 5/8".

SHIMS SHALL CONFORM TO SAME MATERIAL AS POSTS.

ANCHOR BOLTS, NUTS AND WASHERS SHALL BE STAINLESS STEEL.

RAILINGS SHALL BE FABRICATED IN 2 AND 3 PANEL LENGTHS.

RAILING POSTS SHALL BE SET NORMAL TO GRADE LINE.

ALL POST SPACINGS ARE MEASURED HORIZONTALLY ALONG CENTERLINE OF THE POST BASE.

SHIMS SHALL BE USED UNDER POSTS AND END PLATES WHERE REQ'D. FOR ALIGNMENT.

FILL ALL EXPOSED OPENINGS BETWEEN SHIMS AND POST ANCHOR BOLT HOLES WITH NON-STAINING GRAY NON-BITUMINOUS JOINT SEALER.

RAILS SHALL BE BUILT STRAIGHT AND SPRUNG INTO PLACE FOR STRUCTURES CURVED UP TO 3°. FOR STRUCTURES CURVED GREATER THAN 3°. RAILS SHALL BE CURVED TO FIT.

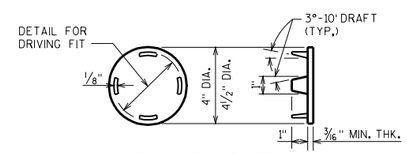

RAIL CLOSURE CAP DETAIL

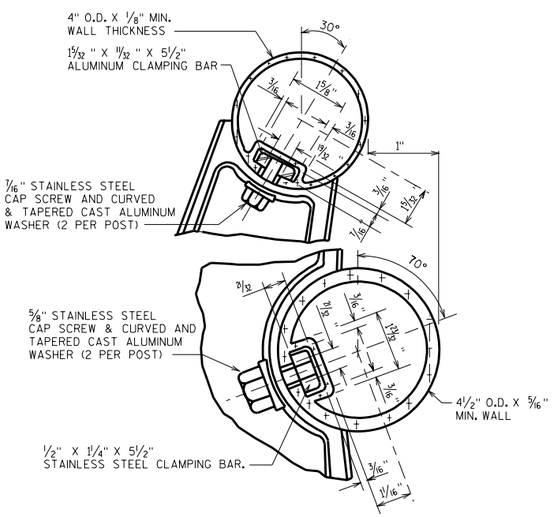

DETAIL OF ATTACHMENT TO POST

NOTES: MAX. REDUCTION IN DIAMETER OF BENT SECTION SHALL BE 3%.
WALL THICKNESS OF TUBING SHOWN ABOVE SHALL BE MIN. NOMINAL AVERAGE WALL THICKNESS.
MAX. REDUCTION IN SLOT WIDTH IN BENT TUBING SHALL BE 3/16".

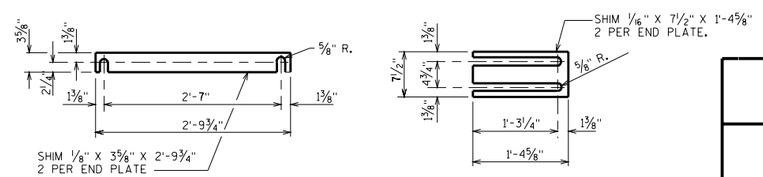

END PLATE SHIM DETAILS

TUBULAR RAILING TYPE 'H' (ALUM.)	
STATE OF WISCONSIN DEPARTMENT OF TRANSPORTATION STRUCTURES DEVELOPMENT SECTION	
APPROVED: _____	DATE: 1/03

STANDARD 30.4