STATE PROJECT NUMBER
- -

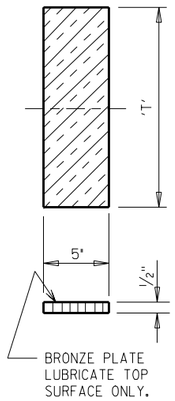

PLATE A

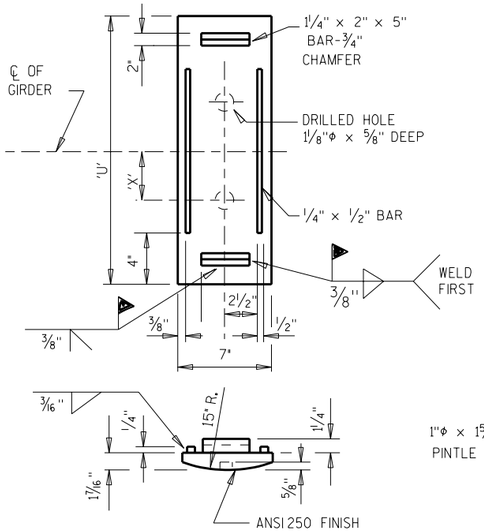

PLATE B

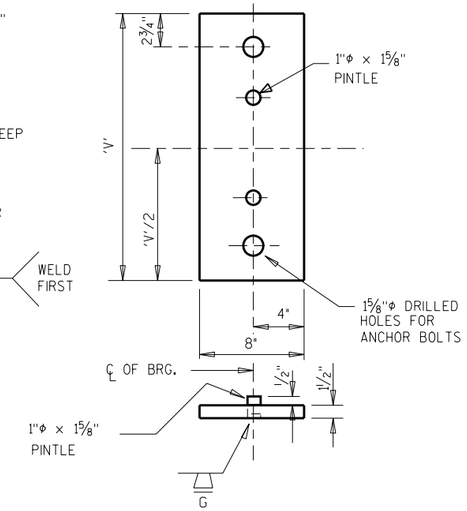

PLATE C

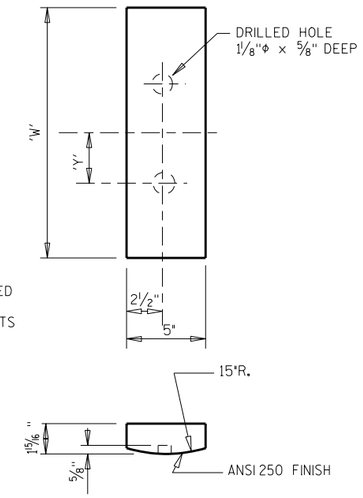

PLATE D

BEARING NOTES

ALL MATERIAL EXCLUDING ANCHOR BOLTS AND PINTLES SHALL BE MADE OF A588 STEEL.

ALL STRUCTURAL STEEL BEARING PLATES SHALL BE FLAT ROLLED STEEL PLATES WITH ALL SURFACES SMOOTH AND FREE FROM WARP AND ALL EDGES SMOOTH, STRAIGHT AND VERTICAL.

ALL PLATE CUTS SHALL BE MACHINE OR MACHINE FLAME CUTS.

MACHINE FINISH THE BOTTOM SURFACE ONLY OF PLATES SHOWN TO BE FINISHED.

ALL MATERIAL EXCLUDING BRONZE PLATES, BEARING PADS AND ANCHOR PLATES SHALL BE PAID FOR AT THE UNIT PRICE BID FOR "HIGH STRENGTH STRUCTURAL STEEL"

ALL ANCHOR BOLTS TO BE 1 1/4" × 1'-3" LONG, SET FLUSH AND CAULKED WITH LEAD TO THE TOP OF PLATE 'C'. EXCESS LENGTH MAY BE FURNISHED, THREADED FOR SETTING AND THEN CUT OFF FLUSH.

CHAMFER TOP OF PINTLES 1/8". DRILL HOLES FOR PINTLES IN PLATE "C" FOR DRIVING FIT.

PROVIDE 1/8" THICK BEARING PAD SAME SIZE AS PLATE 'C' FOR EACH BEARING.

ALL BEARINGS ARE SYMMETRICAL ABOUT ℄ GIRDER AND ℄ OF BEARING.

PINTLES SHALL CONFORM TO A.S.T.M. SPECIFICATION TYPE A449 STEEL, OR MATERIAL OF EQUIVALENT YEILD STRENGTH & ELONGATION.

ALL ANCHOR BOLTS SHALL CONFORM TO A.S.T.M. SPECIFICATION TYPE A36 STEEL.

	GIRDER SIZE	DIM 'T'	DIM 'U'	DIM 'V'	DIM 'W'	DIM 'X'	DIM 'Y'	NO. OF BRG. REQ'D	LOCATION
EXP. BRG.	36"	1'-4 1/2"	1'-9 1/2"	1'-9 1/2"		4"			
	45"	1'-8 1/2"	2'-1 1/2"	2'-1 1/2"		7"			
	54"	2'-0 1/2"	2'-5 1/2"	2'-5 1/2"		9"			
	54W"	2'-4 1/2"	2'-9 1/2"	2'-9 1/2"					
	70"	2'-0 1/2"	2'-5 1/2"	2'-5 1/2"		9"			
FIXED BRG.	36"			1'-8"	1'-8"		4"		
	45"			2'-0"	2'-0"		6 1/4"		
	54"			2'-4"	2'-4"		8"		
	54W"			2'-8"	2'-8"				
	70"			2'-4"	2'-4"		8"		

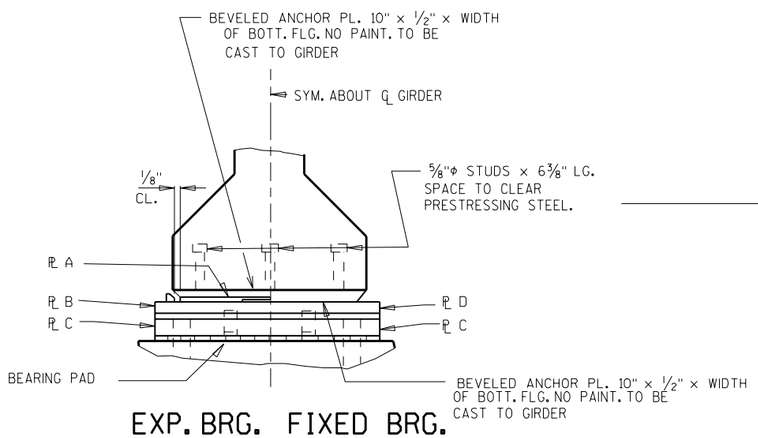

EXP. BRG. FIXED BRG.

BEARING DETAILS

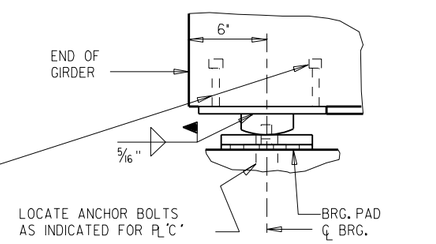

FIXED BEARING ASSEMBLY

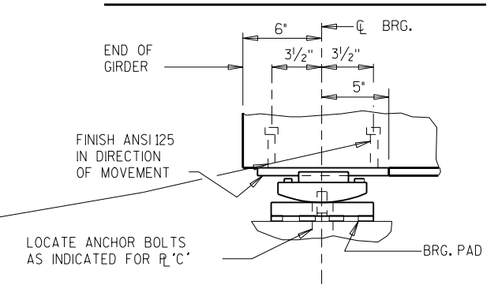

EXPANSION BEARING ASSEMBLY

NO.	DATE	REVISION	BY

STATE OF WISCONSIN
DEPARTMENT OF TRANSPORTATION
STRUCTURES DESIGN SECTION

STRUCTURE

CONST. SPEC. 1996	DRAWN BY	PLANS CK'D.

PRESTRESSED GIRDER BEARINGS

SHEET

8

FILE= BRWPGB.DGN
SCALE = :1

2 - 87

12-99