STATE PROJECT NUMBER

- -

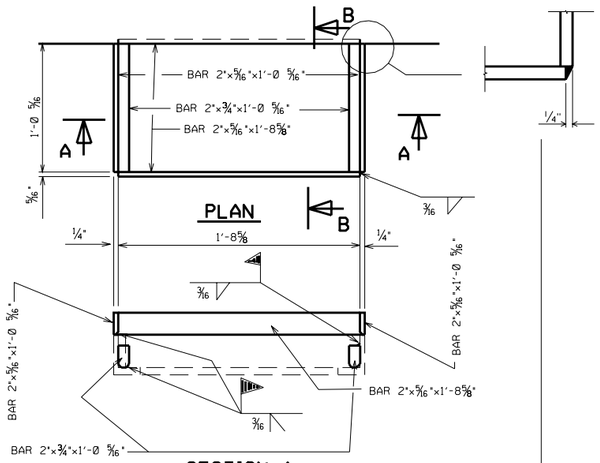

SECTION A

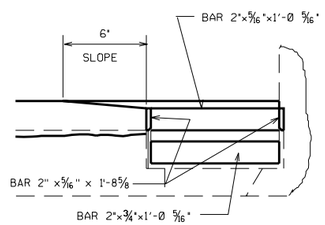

SECTION B

DRAIN DETAILS

NOTE: ALL MATERIAL AND WORK TO BE INCLUDED IN 'ADJUSTING FLOOR DRAINS'. UTILIZE EXIST. GRATE. TACK WELD TO FRAME.

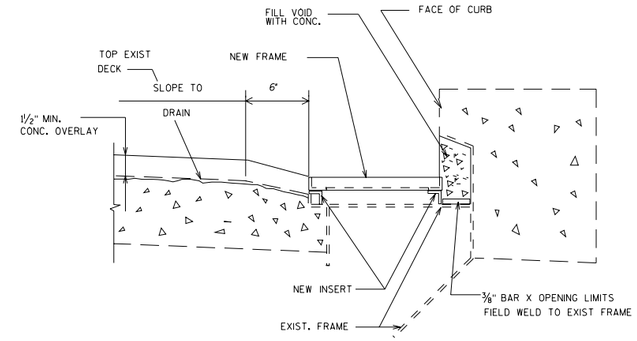

DRAIN RAISING DETAILS

FRAMES & INSERTS TO BE INCLUDED IN PRICE BID FOR 'CONCRETE MASONRY OVERLAY'. FIELD WELD NEW INSERT TO EXIST. FRAME& NEW FRAME TO NEW INSERT. SALVAGE & REUSE OLD GRATE. TACK WELD TO NEW FRAME

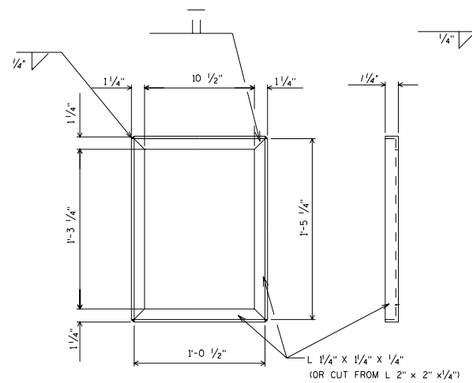

FRAME DETAILS

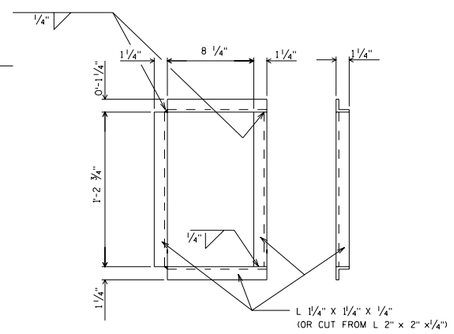

INSERT DETAILS

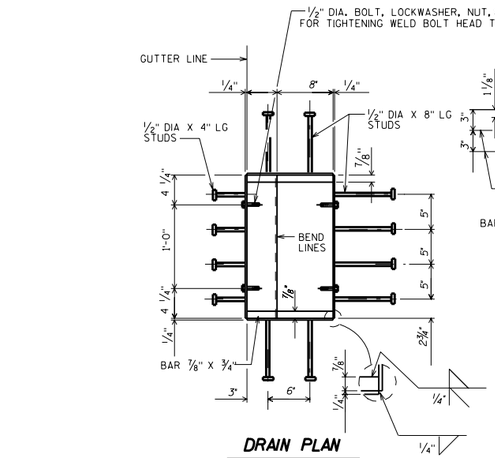

DRAIN PLAN

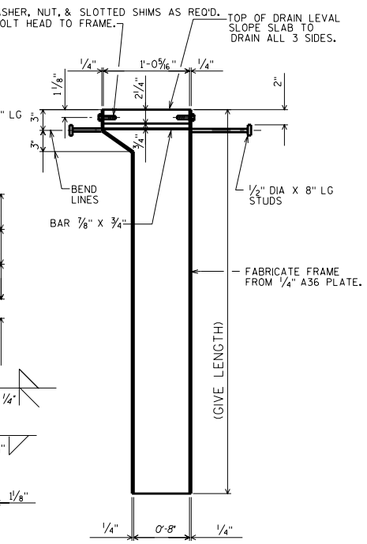

DRAIN ELEVATION

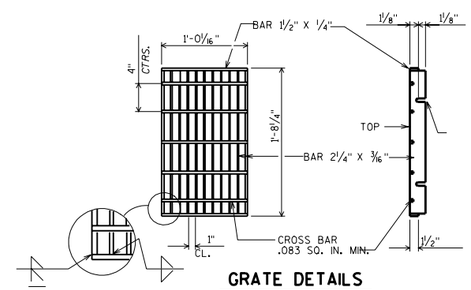

GRATE DETAILS

SEAL WELD INSIDE OF DRAIN TO OBTAIN A WATERTIGHT CHAMBER.
ALL DRAIN MATERIAL INCLUDING GRATE SHALL BE A36 STEEL & ALL STEEL SHALL BE GALVANIZED.
WELDS SHALL BE MADE WITH LOW HYDROGEN ELECTRODES.
*PRIOR TO GALV. A *6 BLAST CLEANING IS REQ'D.*

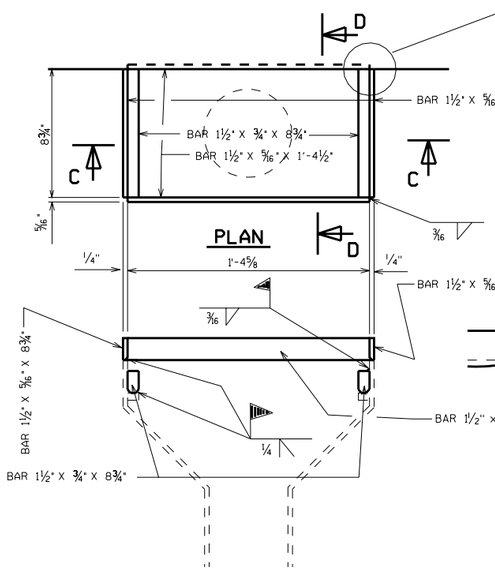

SECTION C

NOTE: ALL MATERIAL AND WORK TO BE INCLUDED IN 'RAISING FLOOR DRAINS'. UTILIZE EXIST. GRATE. TACK WELD TO FRAME.

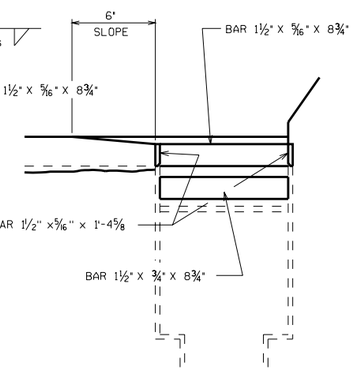

SECTION D

DRAIN DETAILS

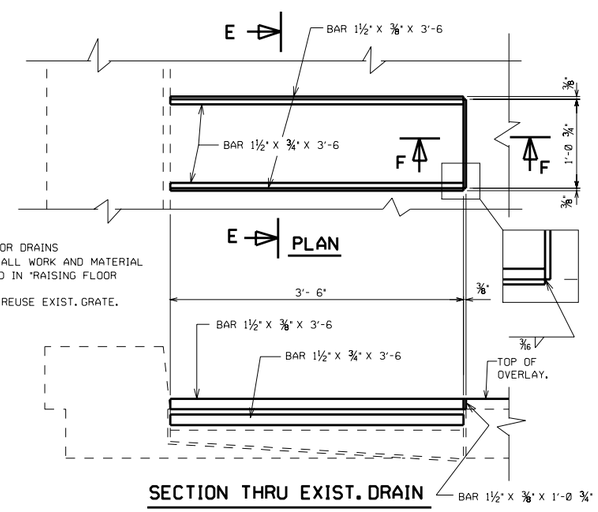

NOTE: 10 EXIST. FLOOR DRAINS TO BE RAISED. ALL WORK AND MATERIAL TO BE INCLUDED IN 'RAISING FLOOR DRAINS'. SALVAGE & REUSE EXIST. GRATE.

SECTION THRU EXIST. DRAIN

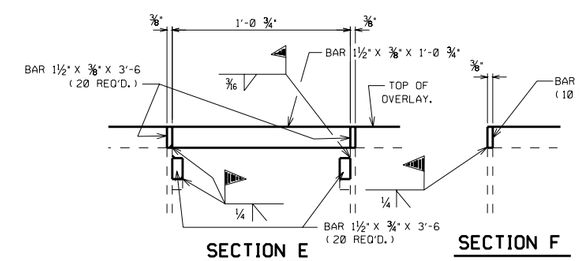

SECTION E

SECTION F

NO.	DATE	REVISION	BY

STATE OF WISCONSIN
DEPARTMENT OF TRANSPORTATION
STRUCTURES DESIGN SECTION

STRUCTURE

CONST. SPEC.	1996	DRAWN BY	PLANS CK'D.

DRAIN DETAILS

SHEET

8

FILE= DRAINSRA.DGN
SCALE =

9-1-94