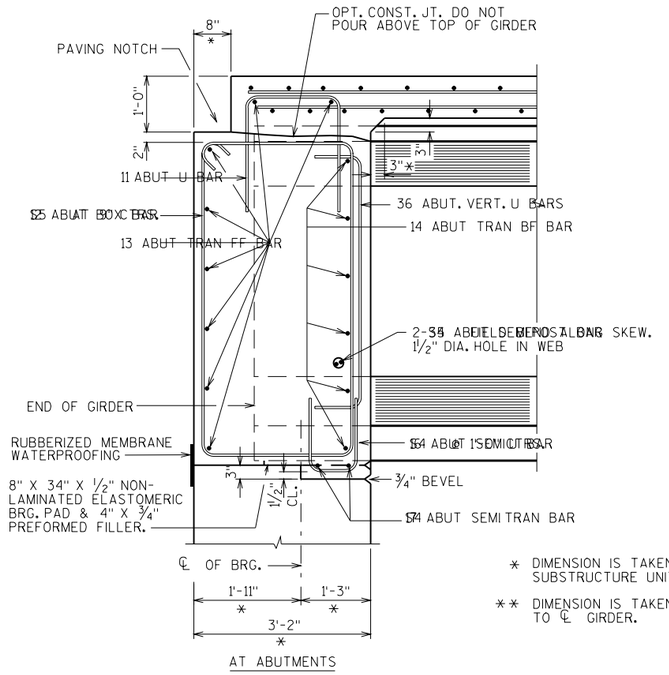

PART LONGIT. SECTION

* DIMENSION IS TAKEN NORMAL TO ℄ SUBSTRUCTURE UNITS.

** DIMENSION IS TAKEN PARALLEL TO ℄ GIRDER.

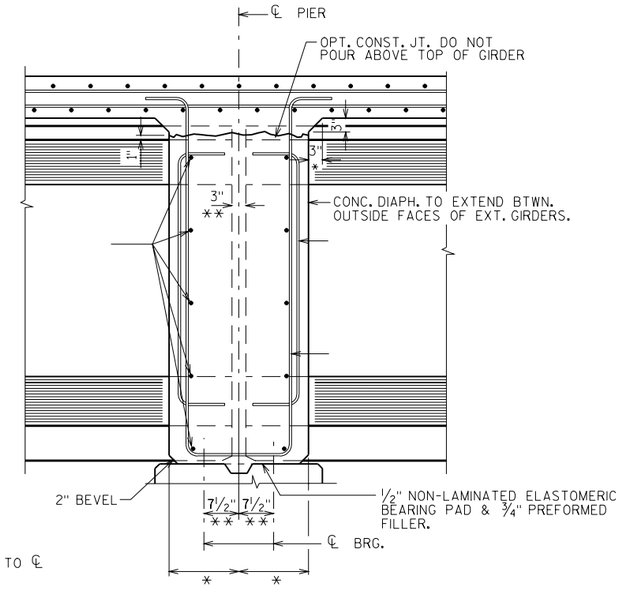

AT PIER DIAPHRAGM

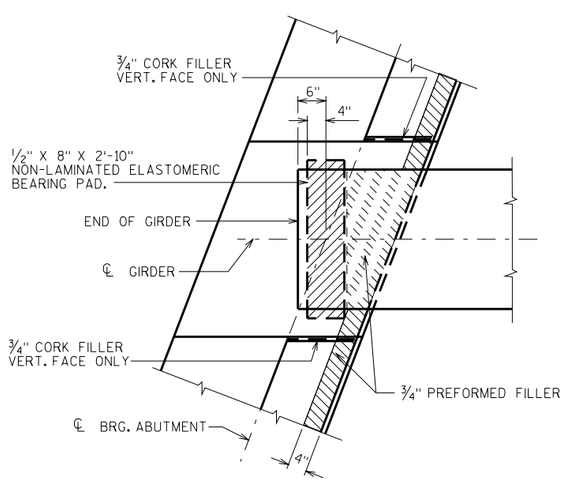

BEARING PAD DETAIL

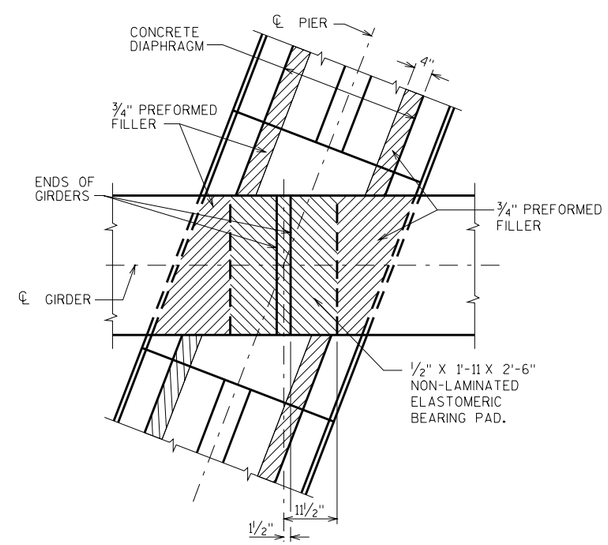

NO.	DATE	REVISION	BY

STATE OF WISCONSIN
DEPARTMENT OF TRANSPORTATION
STRUCTURES DESIGN SECTION

STRUCTURE

CONST. SPEC.	1996	DRAWN BY	PLANS CK'D.

SUPERSTRUCTURE DETAILS

SHEET

8

FILE= G72WDET.DGN
SCALE =
11-02