STATE PROJECT NUMBER

- -

(R) REMOVAL LINE. REMOVE AS NECESSARY TO INSTALL JOINT AND ARMOUR.

(P) PRESERVE AND INCORP. EXIST. HORIZ.. BAR STEEL REINF. IN NEW WORK.

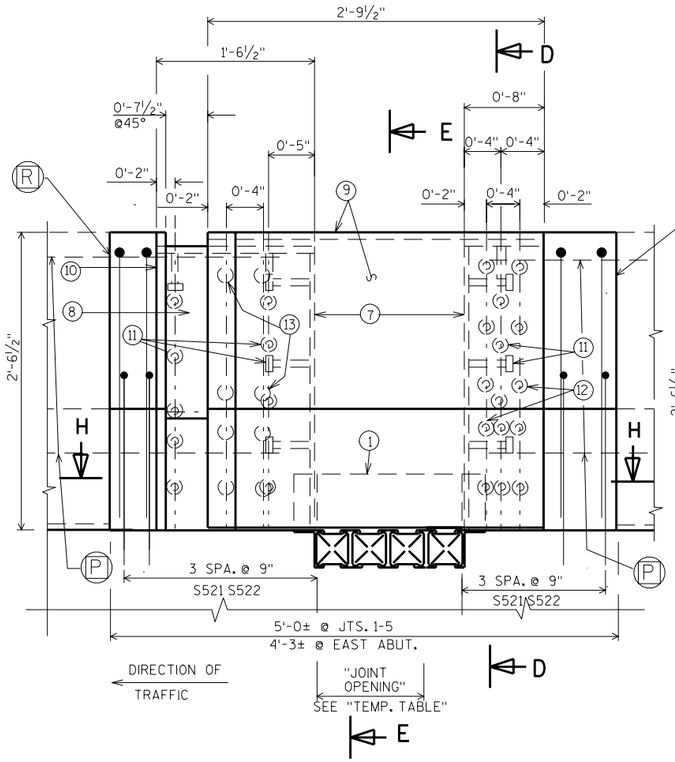

ELEVATION OF PARAPET 'B'

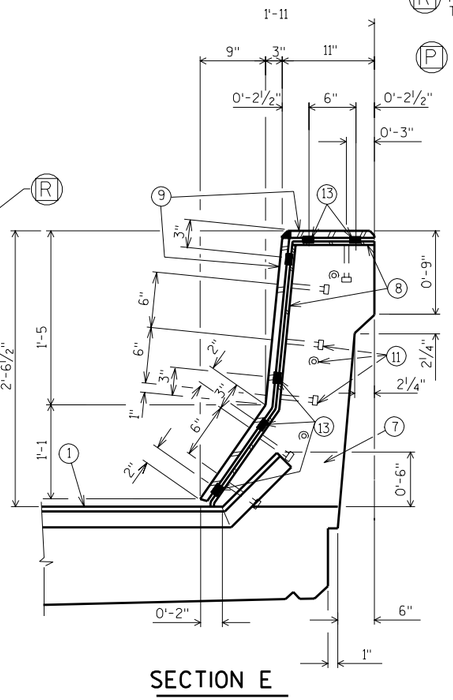

SECTION E

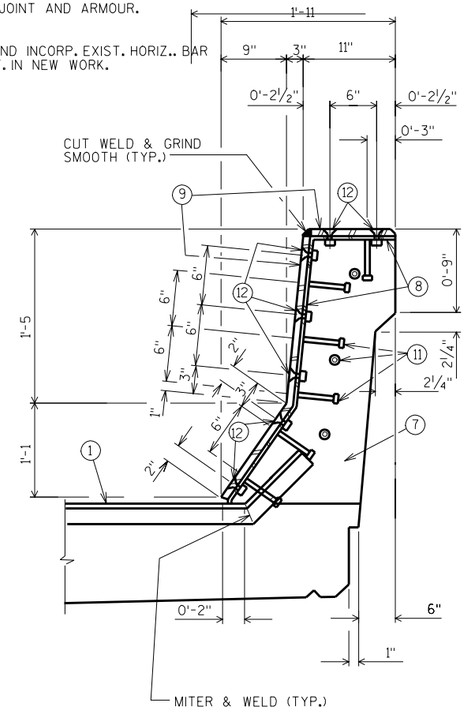

SECTION D

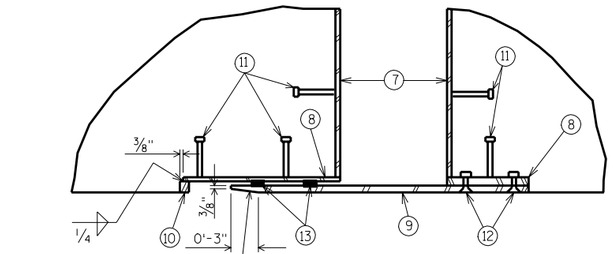

SECTION H

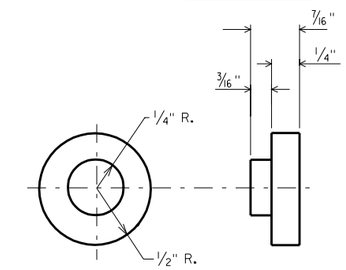

ADIPRENE BUTTON DETAIL

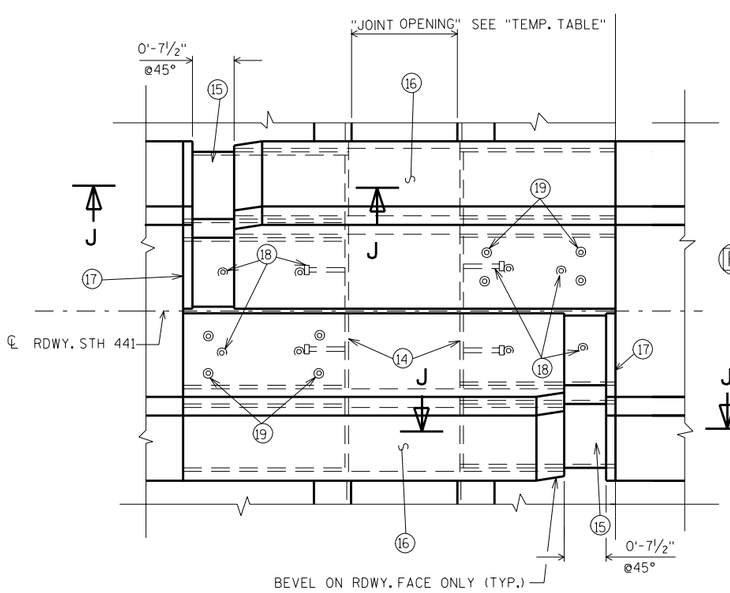

PLAN OF MEDIAN PARAPET

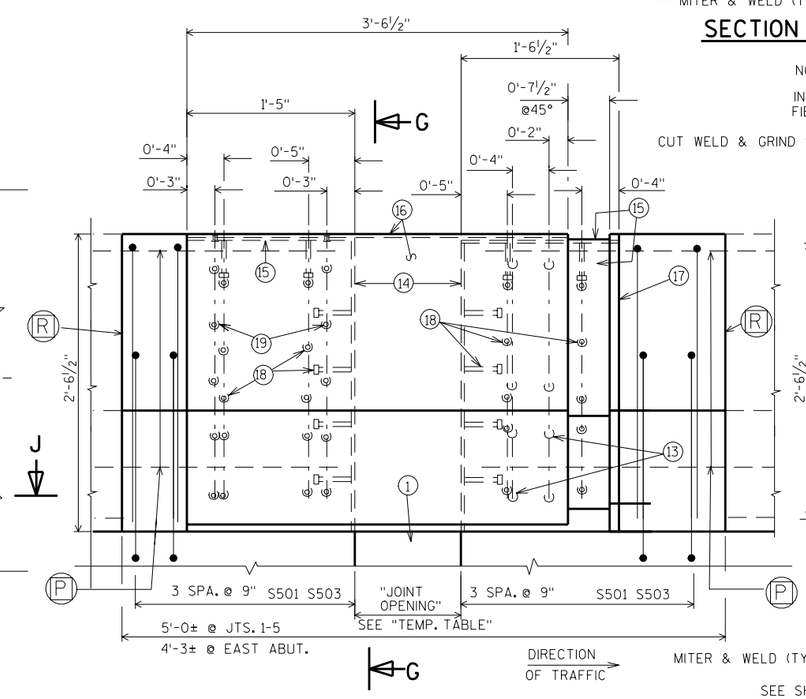

ELEVATION OF MEDIAN PARAPET

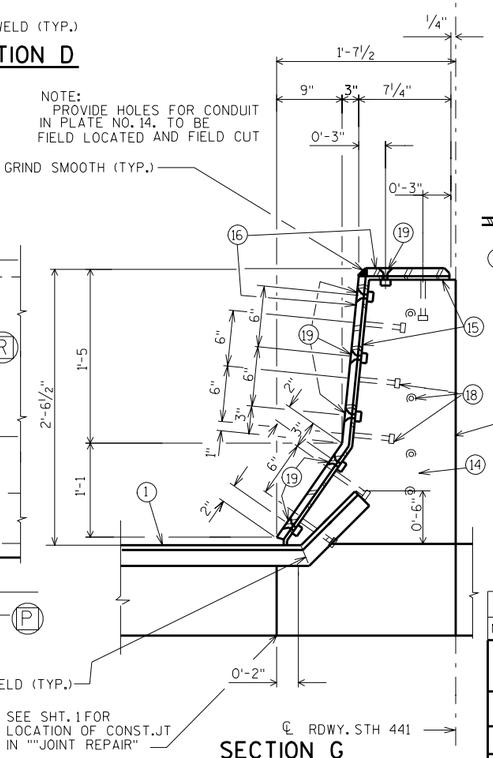

SECTION G

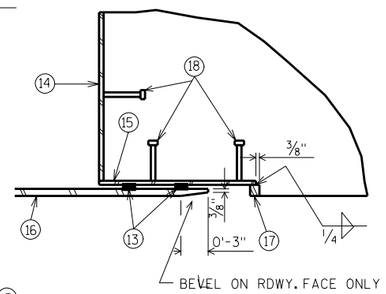

SECTION J

NO.	DATE	REVISION	BY

STATE OF WISCONSIN
DEPARTMENT OF TRANSPORTATION
STRUCTURES DESIGN SECTION

STRUCTURE

CONST. SPEC.	1996	DRAWN BY	PLANS CK'D.

MODULAR EXPANSION DEVICE

SHEET

8

FILE= JT4MODJT.DGN
SCALE = .667

9-1-94