STATE PROJECT NUMBER

- -

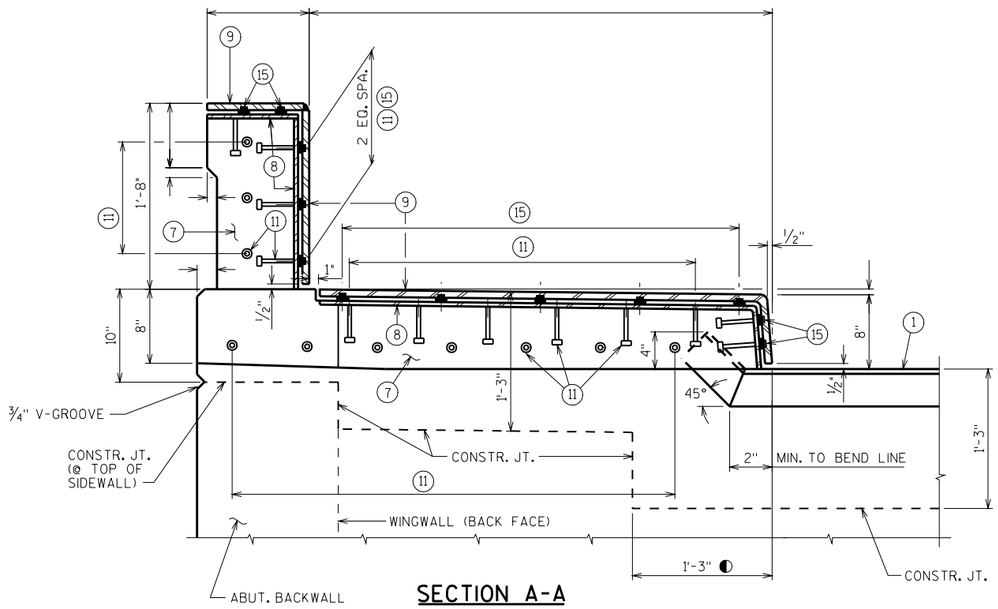

SECTION A-A

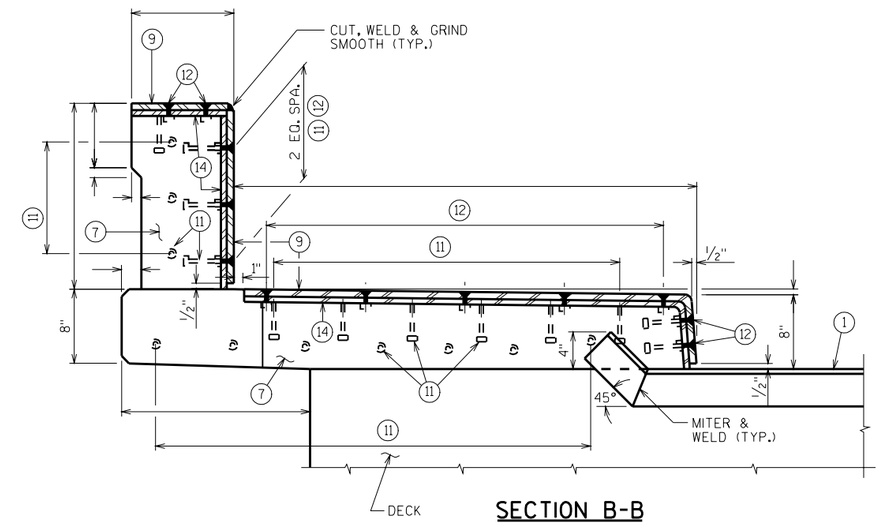

SECTION B-B

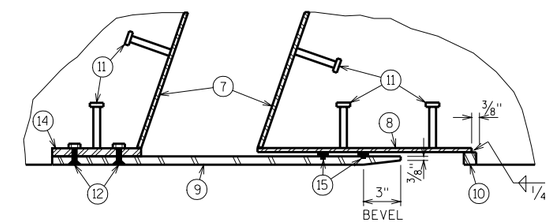

SECTION C-C

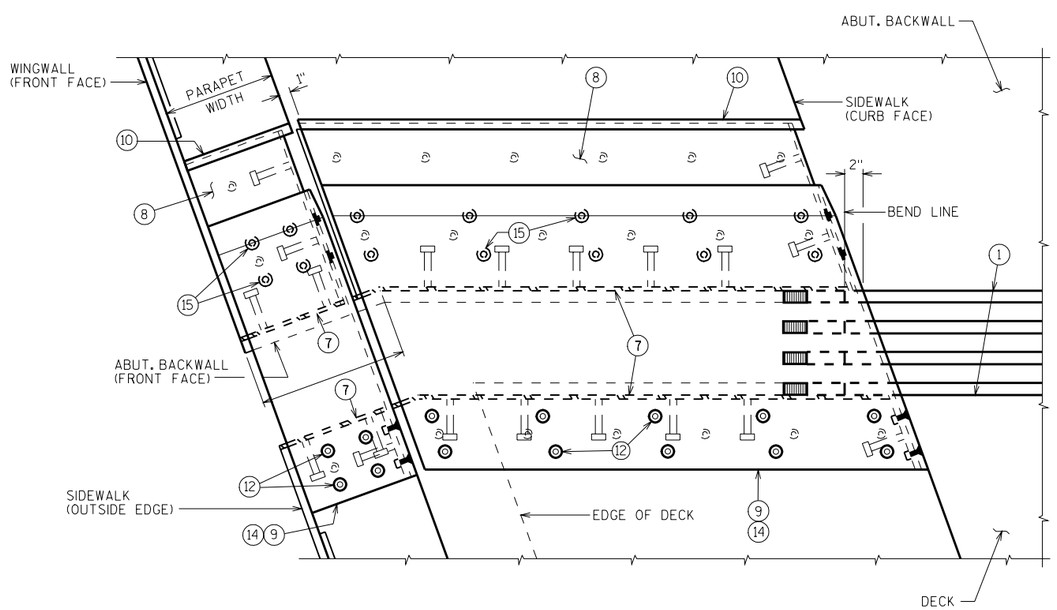

PLAN OF SIDEWALK W/ PARAPET

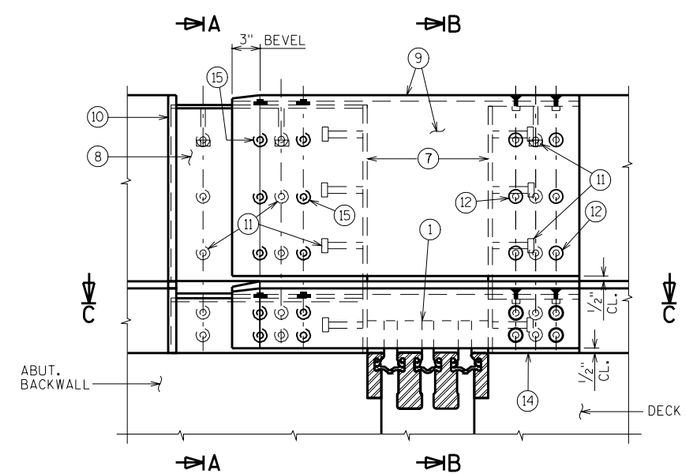

ELEVATION OF SIDEWALK W/ PARAPET

DIRECTION OF TRAFFIC

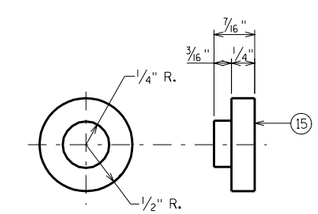

ADIPRENE BUTTON DETAIL

◐ PERPENDICULAR TO FACE OF CURB

NO.	DATE	REVISION	BY

STATE OF WISCONSIN
DEPARTMENT OF TRANSPORTATION
STRUCTURES DESIGN SECTION

STRUCTURE

CONST. SPEC. 1996	DRAWN BY	PLANS CK'D.

COVER PLATES FOR SIDEWALK W/CONC. PARAPET

SHEET

8

FILE= JTMODCVR1.DGN
SCALE = 1.000

12345

7-02