STATE PROJECT NUMBER

- -

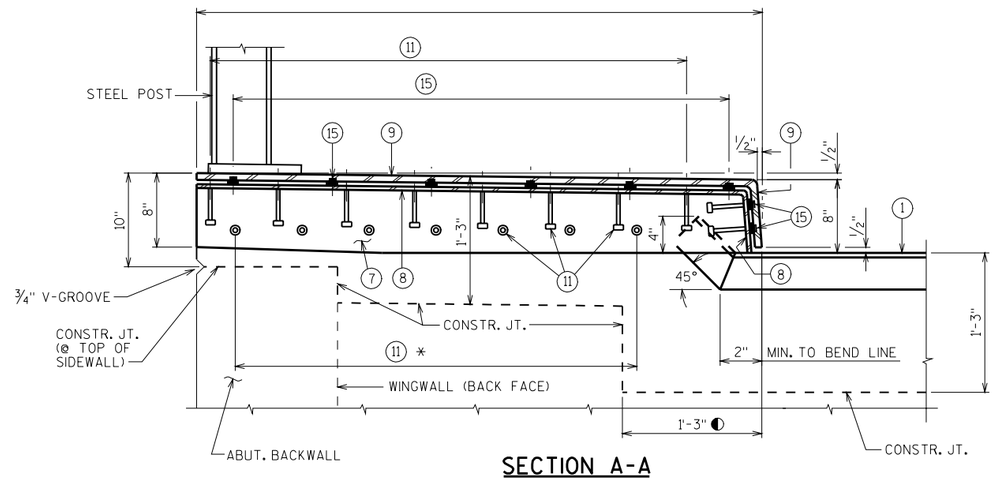

SECTION A-A

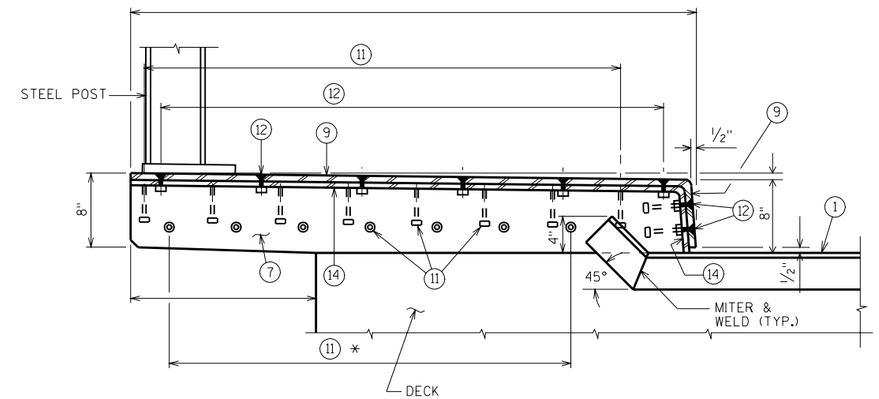

SECTION B-B

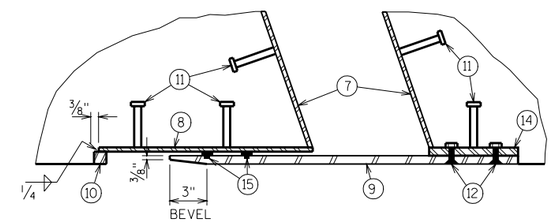

SECTION C-C

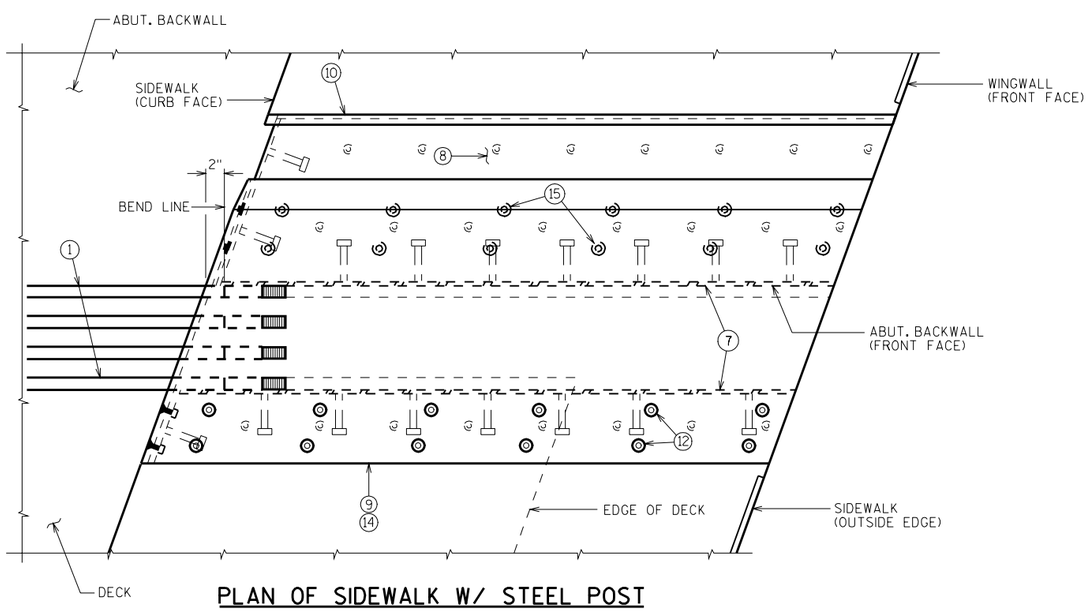

PLAN OF SIDEWALK W/ STEEL POST

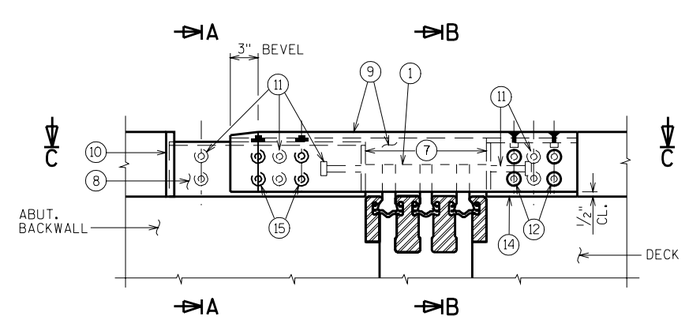

ELEVATION OF SIDEWALK W/ PARAPET

DIRECTION OF TRAFFIC

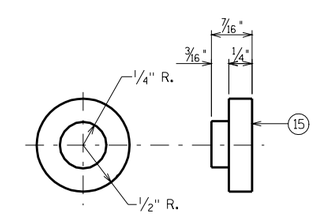

ADIPRENE BUTTON DETAIL

8

NO.	DATE	REVISION	BY

STATE OF WISCONSIN
DEPARTMENT OF TRANSPORTATION
STRUCTURES DESIGN SECTION

STRUCTURE

CONST. SPEC. 1996	DRAWN BY	PLANS CK'D.

COVER PLATES FOR SIDEWALK W/STEEL RAIL

SHEET

FILE= JTMODCVR3.DGN
SCALE = 1.000

7-02