STATE PROJECT NUMBER
- -

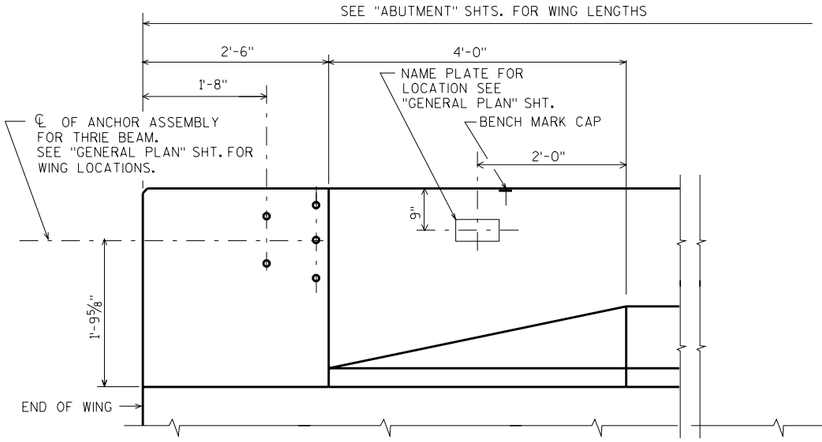

INSIDE ELEVATION

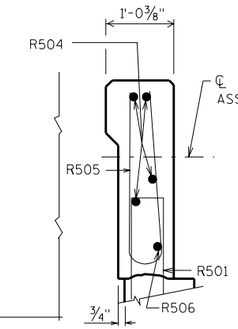

SECTION A

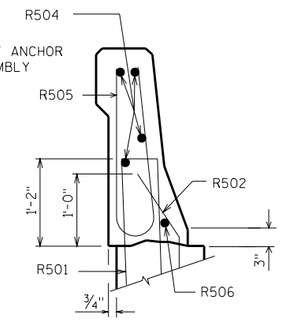

SECTION B

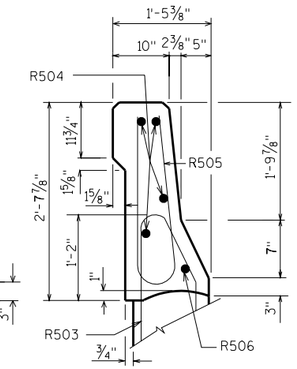

SECTION C

BILL OF BARS

FOR ABUTMENT PARAPETS

BAR MARK	COAT	ABUT.	ABUT.	LENGTH	BENT	BAR SERIES	LOCATION
R501	X			4-7	X		PARAPET VERT.
R502	X			2-4	X		PARAPET VERT.
R503	X			4-6	X		PARAPET VERT.
R504	X						PARAPET HORIZ.
R505	X			4-10	X		PARAPET VERT.
R506	X				X		PARAPET HORIZ.

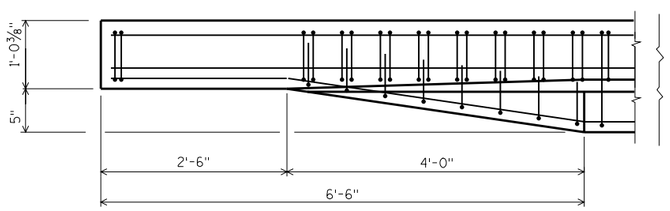

PLAN

ABUT. BACKWALL.

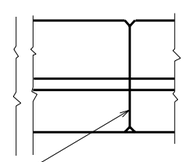

OPTIONAL CONSTRUCTION JOINTS IN THE PARAPETS MAY BE USED. RUN BAR REINF THRU THE JOINT. LAP LONGIT. BARS A MIN. OF 1'-9" MIN. JOINT SPACING OF 80'-0" DEFINE CONST. JOINT WITH A ¾" 'V' GROOVE.

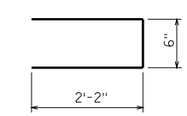

R501

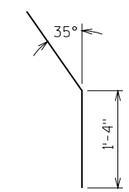

R502

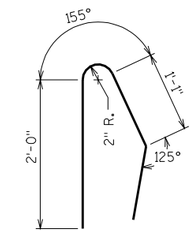

R503

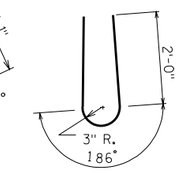

R505

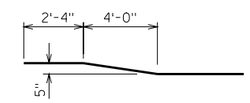

R506

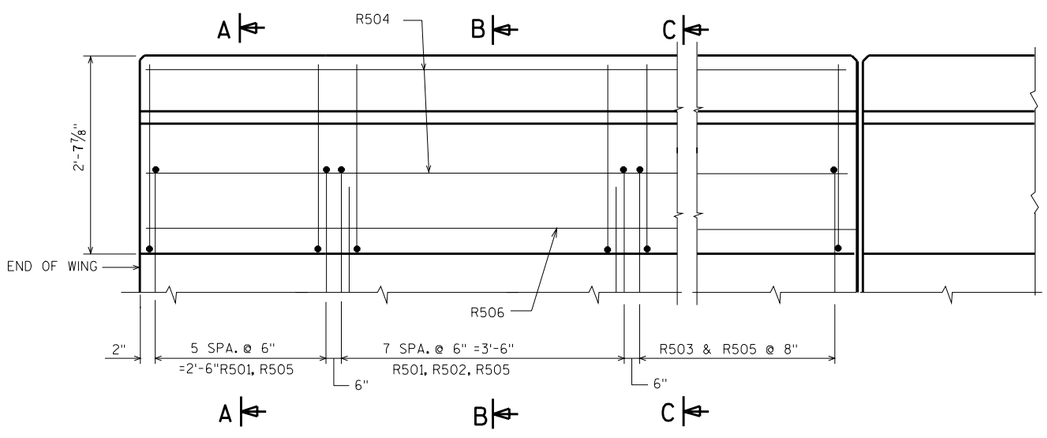

OUTSIDE ELEVATION

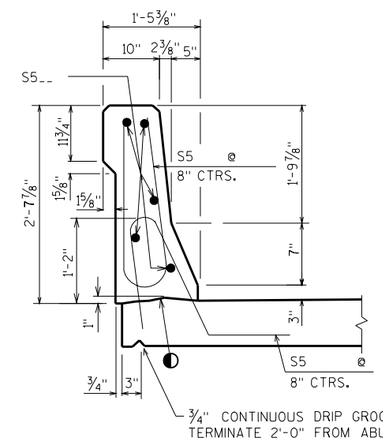

SECTION THRU PARAPET ON BRIDGE

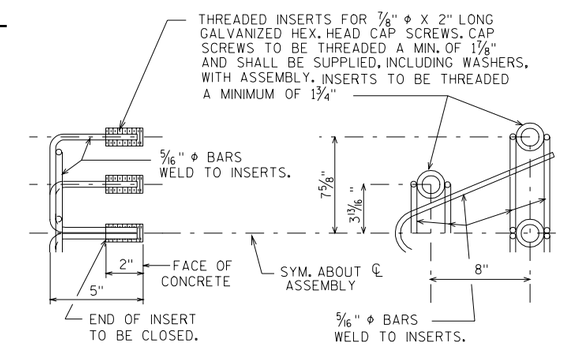

DETAIL OF ANCHOR ASSEMBLY

NOTE: HEX. HEAD CAP SCREWS & WASHERS TO BE GALVANIZED IN ACCORDANCE WITH AASHTO M232 CLASS C.

◐ CONST. JOINT - STRIKE OFF AS SHOWN.

8

NO.	DATE	REVISION	BY

STATE OF WISCONSIN
DEPARTMENT OF TRANSPORTATION
STRUCTURES DESIGN SECTION

STRUCTURE

CONST. SPEC.	1996	DRAWN BY	PLANS CK'D.

SLOPED FACE PARAPET LF

SHEET

FILE= LFWIN.DGN
SCALE =

1-03

12