STATE PROJECT NUMBER

- -

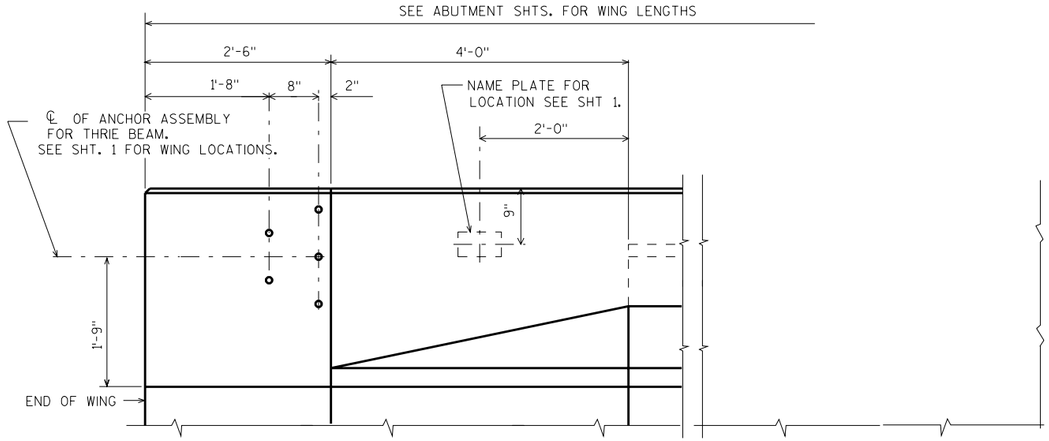

INSIDE ELEVATION

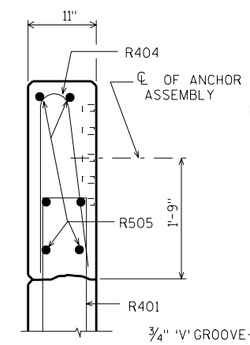

SECTION A

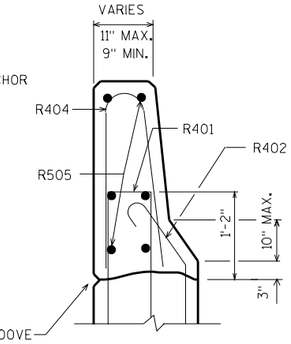

SECTION B

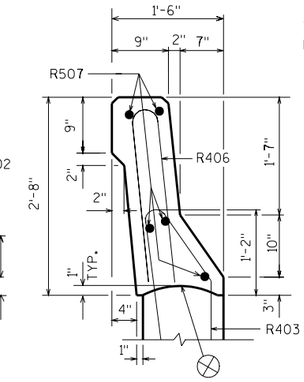

SECTION C

PLAN

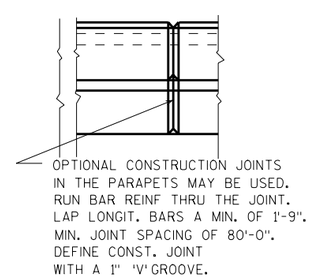

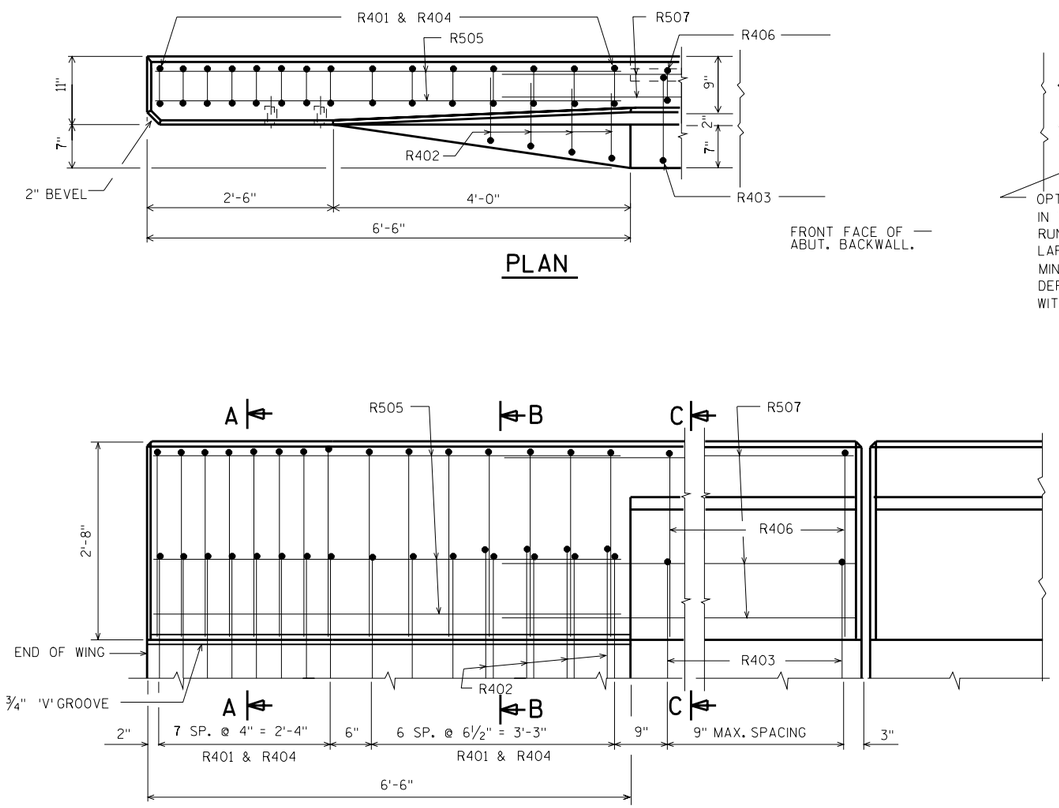

OUTSIDE ELEVATION

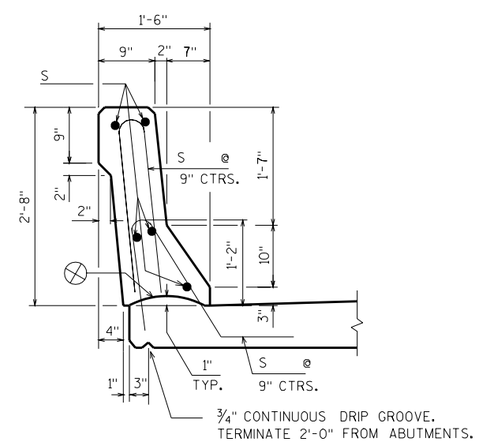

SECTION THRU PARAPET ON BRIDGE

BILL OF BARS

FOR ABUTMENT PARAPETS

THE FIRST DIGIT OF THE BAR MARK SIGNIFIES THE BAR SIZE. EPOXY COAT ALL PARAPET REINF.

BAR MARK	NO. REQ'D. ABUT.	NO. REQ'D. ABUT.	LENGTH	BENT	LOCATION
R401	30	30	4-9	X	WINGS STIRRUPS
R402	8	8	3-1	X	WINGS
R403			4-9	X	WINGS STIRRUPS
R404	30	30	4-9	X	WINGS
R505	12	12	6-2		WINGS
R406			4-10	X	WINGS
R507	10	10			WINGS

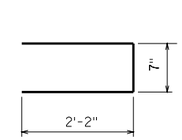

R401

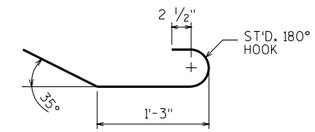

R402

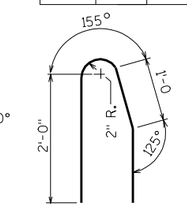

R403

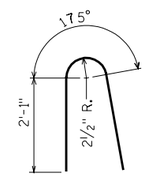

R404

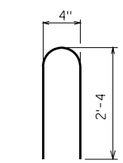

R406

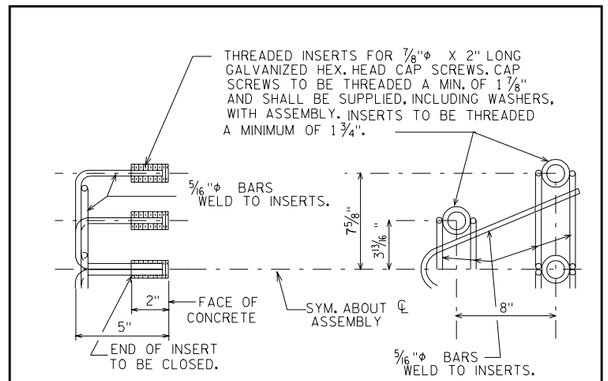

DETAIL OF ANCHOR ASSEMBLY

NOTE: HEX. HEAD CAP SCREWS & WASHERS TO BE GALVANIZED IN ACCORDANCE WITH AASHTO M232 CLASS C.

⊗ CONST. JOINT - STRIKE OFF AS SHOWN.

8

NO.	DATE	REVISION	BY

STATE OF WISCONSIN
DEPARTMENT OF TRANSPORTATION
STRUCTURES DESIGN SECTION

STRUCTURE

CONST. SPEC. 1996	DRAWN BY	PLANS CK'D.

SLOPED FACE PARAPET "B"

SHEET

FILE= PPTB.DGN
SCALE =