STATE PROJECT NUMBER

- -

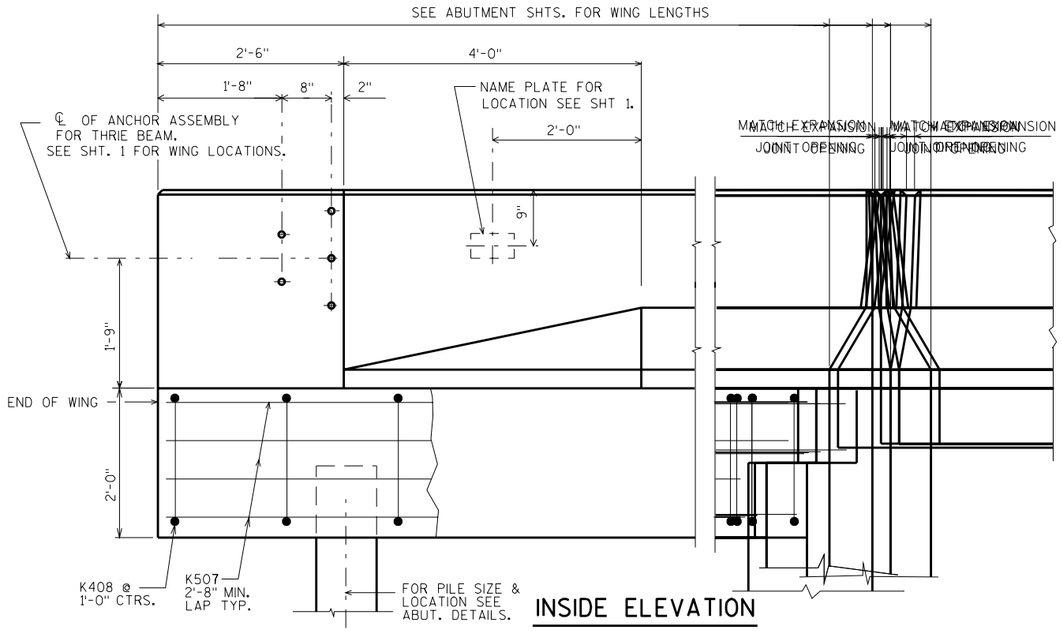

INSIDE ELEVATION

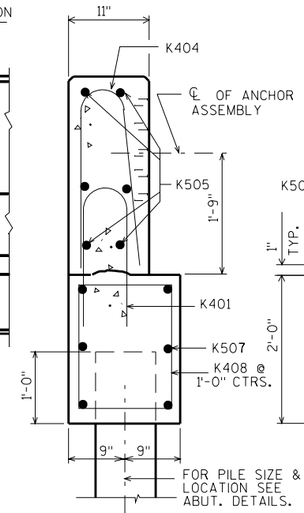

SECTION A

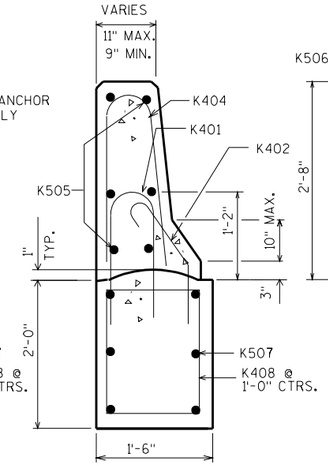

SECTION B

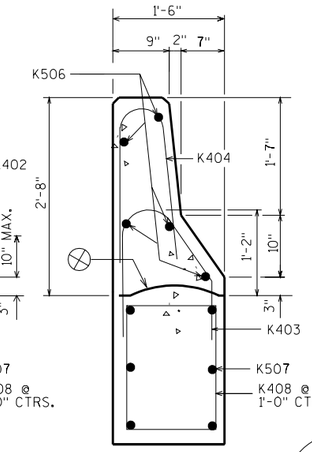

SECTION C

BILL OF BARS

FOR ABUTMENT PARAPETS

THE FIRST DIGIT OF THE BAR MARK SIGNIFIES THE BAR SIZE.
EPOXY COAT ALL PARAPET REINF.

BAR MARK	NO. REQ'D. ABUT.	NO. REQ'D. ABUT.	LENGTH	BENT	LOCATION
K401	15	15	4-9	X	WINGS STIRRUPS
K402	4	4	3-1	X	WINGS
K403			5-1	X	WINGS STIRRUPS
K404			4-9	X	WINGS
K505	6	6	6-2		WINGS
K506	5	5			WINGS
K507					WING FOOTING
K408			6-0	X	WING FOOTING

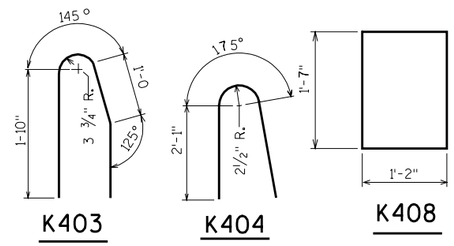

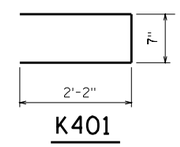

K401

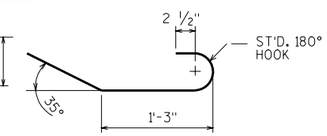

K402

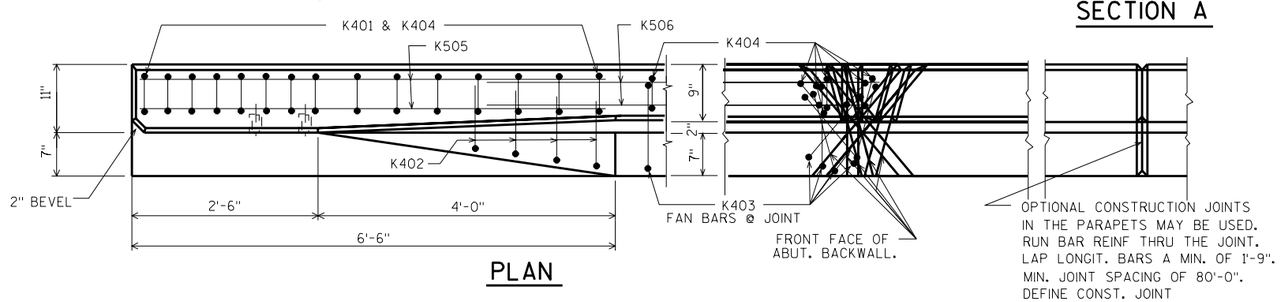

PLAN

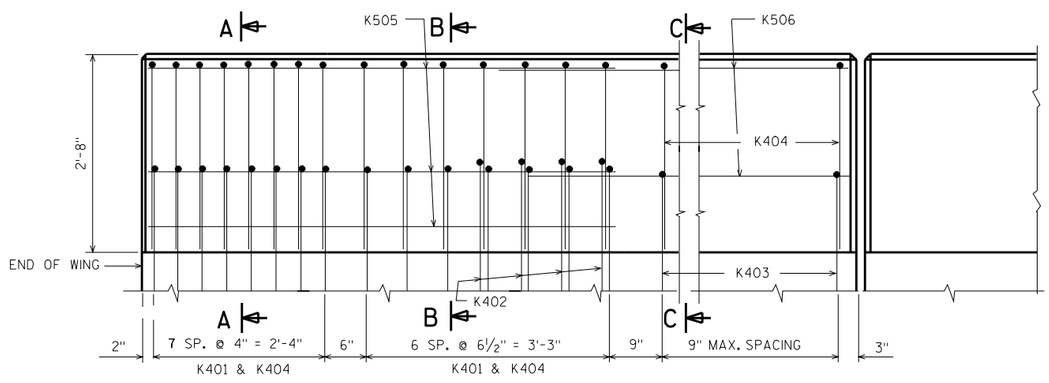

OUTSIDE ELEVATION

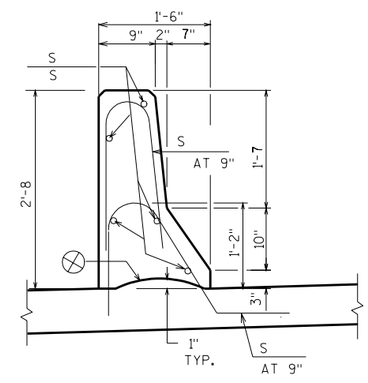

SECTION THRU PARAPET ON BRIDGE

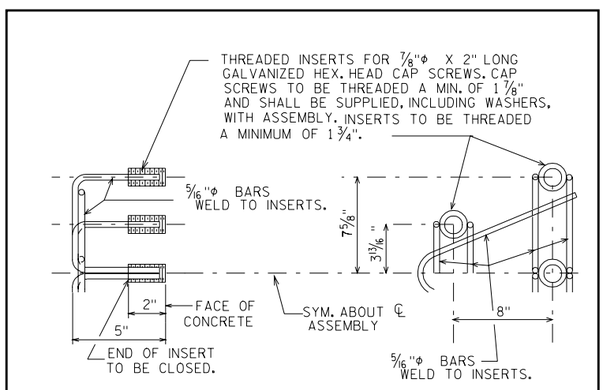

DETAIL OF ANCHOR ASSEMBLY

NOTE: HEX. HEAD CAP SCREWS & WASHERS TO BE GALVANIZED IN ACCORDANCE WITH AASHTO M232 CLASS C.

⊗ CONST. JOINT - STRIKE OFF AS SHOWN.

8

NO.	DATE	REVISION	BY

STATE OF WISCONSIN
DEPARTMENT OF TRANSPORTATION
STRUCTURES DESIGN SECTION

STRUCTURE

CONST. SPEC. 1996	DRAWN BY	PLANS CK'D.

SLOPED FACE PARAPET "C"

SHEET

FILE= PPTC.DGN
SCALE =

9-1-94

FT 55