STATE PROJECT NUMBER

- -

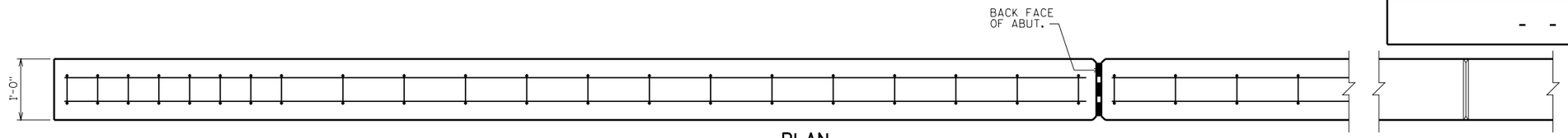


## PLAN

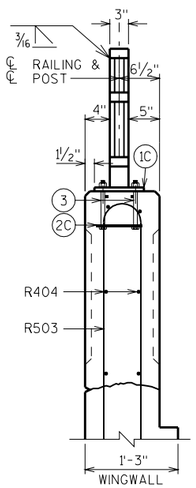


## END VIEW

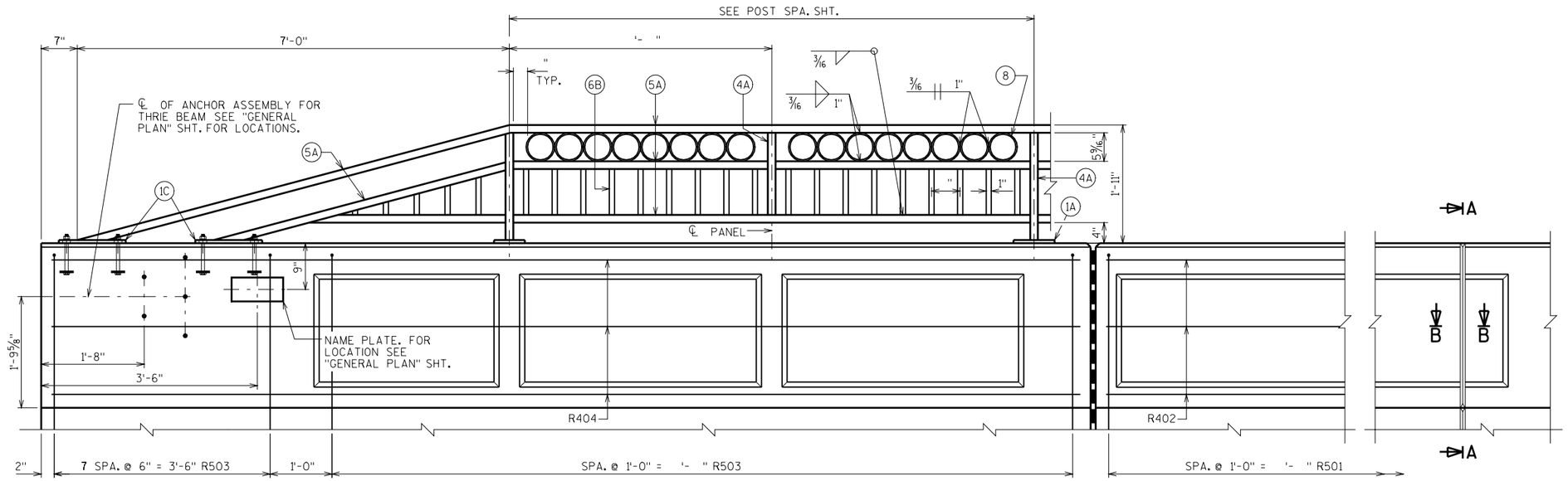


## ELEVATION OF PARAPET

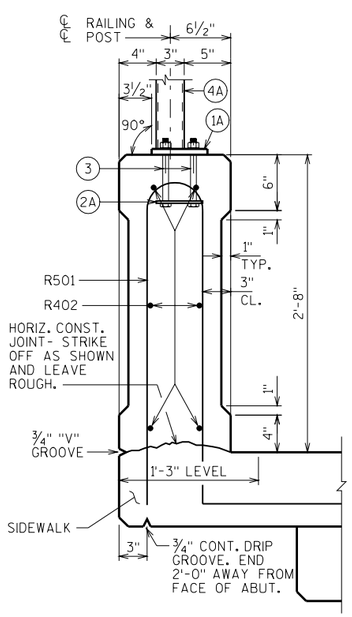


## SECTION THRU PARAPET ON BRIDGE

* ADJUST LOCATIONS OF BARS TO ALLOW PLACEMENT OF ANCHOR ASSEMBLY FOR RAILING AND BEAM GUARD.

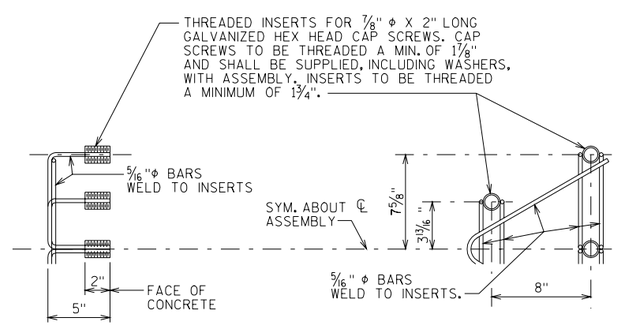


## DETAIL OF ANCHOR ASEMBLY

NOTE: HEX HEAD CAP SCREWS & WASHERS TO BE GALVANIZED IN ACCORDANCE WITH AASHTO M232 CLASS C.

ASSEMBLY SHALL BE BID ITEM "ANCHOR ASSEMBLY FOR BEAM GUARD", EACH.

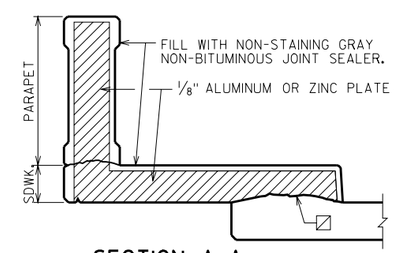


## SECTION A-A

(SHOWING DEFLECTION JOINT IN PARAPET AND SIDEWALK.)

WHEN PARAPETS ARE POURED CONTINUOUSLY FROM END TO END, THEY SHALL BE SEPARATED AT THE DEFLECTION JOINTS BY A PIECE OF 1/8" ZINC OR ALUMINUM PLATE CUT AS SHOWN IN SECTION A-A BY SHADED AREA. IF CONSTRUCTION JOINTS IN PARAPETS ARE USED AT THE DEFLECTION JOINTS, ONE SIDE OF JOINT SHALL BE COATED WITH BITUMINOUS PAINT AND PLATE SEPARATORS MAY BE OMITTED.

▨ HORIZ. CONST. JOINT - STRIKE OFF AS SHOWN AND LEAVE ROUGH.

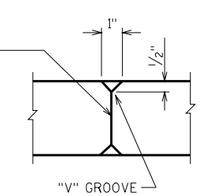


## SECTION B-B

8

| NO. | DATE | REVISION | BY |
|---|---|---|---|
| | | | |

STATE OF WISCONSIN
DEPARTMENT OF TRANSPORTATION
STRUCTURES DESIGN SECTION

STRUCTURE

| CONST. SPEC. 1996 | DRAWN BY | PLANS CK'D. |
|---|---|---|

COMBINATION RAIL TYPE "C1"

SHEET

FILE= RAILCOMB.DGN
SCALE = 1.000

3-02

1 2 3 4 5 11 12

| STATE PROJECT NUMBER |
|---|
| - - |

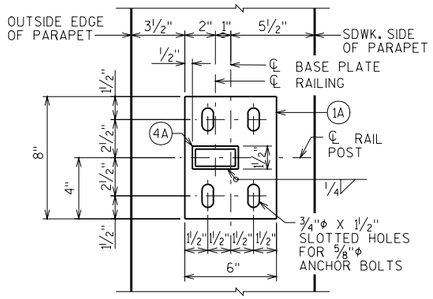


## TYPICAL RAIL POST BASE PLATE

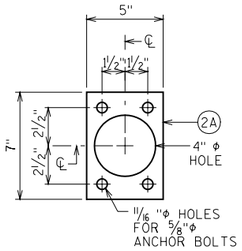


## ANCHOR PLATE

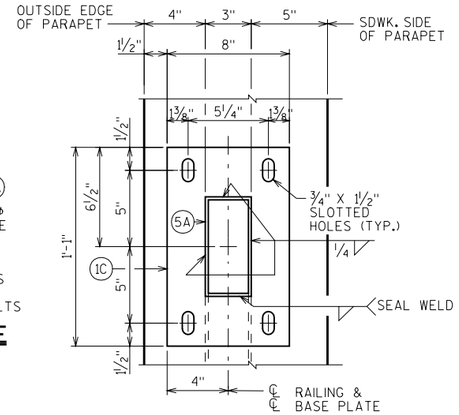


## END RAIL BASE PLATE

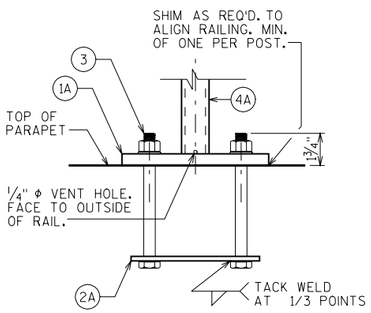


## ANCHOR BOLTS FOR RAIL POSTS

NOTE: ANCHOR PLATE NOT REQUIRED WHEN TYPE S ANCHORS ARE USED.

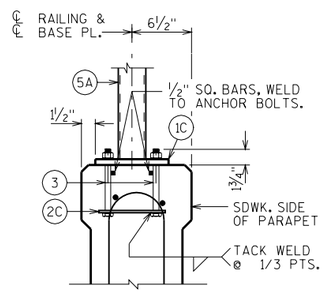


## ANCHOR BOLTS FOR END RAIL

NOTE: ANCHOR PLATES NOT REQ'D. WHEN TYPE "S" ANCHORS ARE USED.

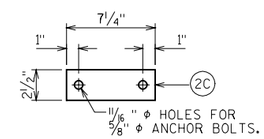


## END RAIL ANCHOR PLATE

FOR END RAIL BASE PLATES
2 REQ'D. PER END RAIL BASE PLATE

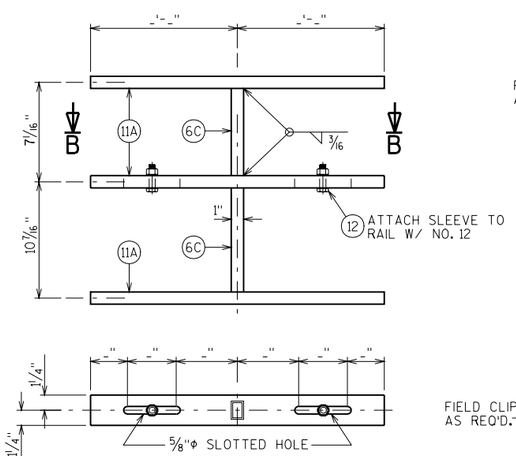


## SECTION B-B

## SLEEVE DETAIL

(AT MODULAR EXP. JT.)

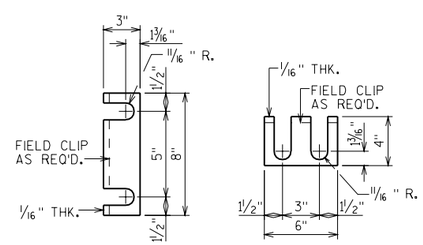


## RAIL POST SHIM DETAIL

(2 SETS PER POST)

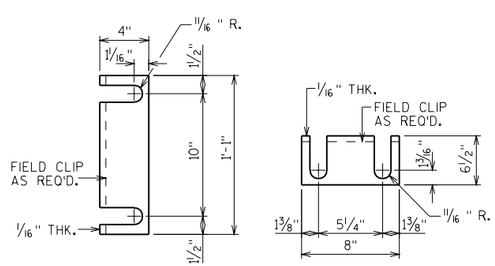


## END RAIL SHIM DETAIL

(2 SETS PER POST)

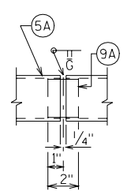


## SHOP RAIL SPLICE DETAIL

(LOCATION MUST BE SHOWN ON SHOP DRAWINGS)

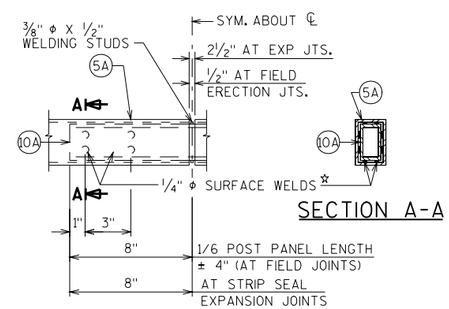


## FIELD ERECTION JOINT DETAIL

☆MIN. ⅝" FLAT SURFACE DIA. PUNCHINGS OR STUDS MAY BE USED AS AN ALTERNATE.

## BILL OF BARS

| BAR MARK | COAT | ABUT. | ABUT. | LENGTH | BENT | LOCATION |
|---|---|---|---|---|---|---|
| R501 | X | | | 6-10 | X | PARAPET VERT. |
| R402 | X | | | - | | PARAPET HORIZ. |
| R503 | X | | | 8-2 | X | PARAPET VERT. @ WINGS |
| R404 | X | | | - | | PARAPET HORIZ. @ WINGS |
| | | | | | | |

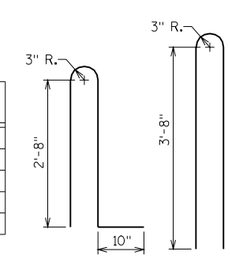


R501




R503

## LEGEND

(1A) PLATE ⅝" X 6" X 8" WITH ¾" X 1½" SLOTTED HOLES.

(1C) PLATE ⅝" X 8" X 1'-1" WITH ¾" X 1½" SLOTTED HOLES.

(2A) ¼" X 5" X 7" ANCHOR PLATE WITH 11/16 " φ HOLES FOR ANCHOR BOLTS NO. 3.

(2C) ¼" X 2½" X 7¼" ANCHOR PLATE WITH 11/16 " φ HOLES FOR ANCHOR BOLTS NO. 3.

(3) ⅝" DIA. X 7½" LONG ASTM F593 TYPE 316 STAINLESS STEEL ANCHOR BOLTS WITH NUT AND WASHERS OF SAME ALLOY GROUP. (ALTERNATE RAIL POST ANCHORAGE - 4 EQUIV. STAINLESS STEEL CONCRETE MASONRY ANCHORS, TYPE S (EPOXY), ⅝" φ. MINIMUM PULLOUT CAPACITY OF 15 KIPS. EMBED A MIN. OF 7" FOR RAIL POSTS AND 5" FOR END RAILS.)

(4A) STRUCTURAL TUBING 3" X 1½" X 3/16". PLACE VERTICAL. WELD TO NO. 1 & 5.

(5A) STRUCTURAL TUBING 3" X 1½" X 3/16" RAILS. WELD TO NO. 1 & NO. 4.

(6B) STRUCTURAL TUBING 1" X 1½" X ⅛" PICKETS. WELD TO NO. 5. SPACE AT 6" MAX. ℄ TO ℄ SPACING. PLACE VERTICAL.

(6C) STRUCTURAL TUBING 1" X 1½" X ⅛" PICKETS. WELD TO NO. 11. PLACE VERTICAL.

(8) 5"φ SCH. 40 PIPE (5 9/16 O.D.) 1½" LONG SLICES. WELD TO NO. 5A.

(9A) RECTANGULAR SLEEVE FABRICATED FROM 3/16" PLATES. PROVIDE "SLIDING FIT".

(10A) RECTANGULAR SLEEVE FABRICATED FROM 3/16" PLATES. (1'-4" @ FIELD ERECTION JTS.) (1'-4" @ STRIP SEAL EXP. JTS.)

(11A) BAR 2½" X 1" X '- ".

(12) ½" DIA. STAINLESS STEEL BOLT WITH NUT AND LOCKWASHER.

## NOTES

BID ITEM SHALL BE "COMBINATION RAILING TYPE "C1" ", WHICH SHALL INCLUDE ALL STEEL ITEMS SHOWN, AND PAINTING.

POST BASE PLATES SHALL BE FLAT WITH ALL SURFACES SMOOTH AND FREE FROM WARP AND ALL EDGES SMOOTH, STRAIGHT AND VERTICAL. ALL PLATE CUTS SHALL BE MACHINE OR MACHINE FLAME CUTS.

NO. 1, 2, 8, 9 AND NO. 10 SHALL CONFORM TO THE REQUIREMENTS OF A.S.T.M. A709 GRADE 36. STRUCTURAL TUBING SHALL CONFORM TO THE REQUIREMENTS OF A.S.T.M. A500 GRADE B (NO. 4, NO. 5, AND NO. 6).

ANCHORAGES SHALL BE ACCURATELY PLACED TO PROVIDE CORRECT ALIGNMENT OF RAILING. SET NORMAL TO GRADE.

CUT BOTTOM OF POST TO MAKE POST VERTICAL IN BOTH TRANSVERSE AND LONGITUDINAL DIRECTION.

STEEL SHIMS SHALL BE PROVIDED & USED UNDER BASE PLATES WHERE REQUIRED FOR ALIGNMENT.

FILL BOLT SLOT OPENINGS IN SHIMS AND PLATE NO. 1 AND CAULK AROUND PERIMETER OF PLATE NO. 1 WITH NON-STAINING GRAY NON-BITUMINOUS JOINT SEALER.

ALL JOINTS AND RECESSES IN CONCRETE PARAPET ARE TO BE VERTICAL.

AFTER FABRICATION, ALL MATERIAL, EXCEPT ANCHORAGE (NO. 2 & 3) & SHIMS SHALL BE PAINTED WITH A THREE COAT ZINC-RICH EPOXY SYSTEM PER WISDOT STANDARD SPECIFICATION, SECTION 517, EPOXY SYSTEM. SHIMS SHALL BE GIVEN ONE COAT OF ZINC RICH PRIMER PAINT. THE FINISH COLOR SHALL BE FEDERAL COLOR NO. , .

¼"φ VENT HOLES LOCATED IN TOP RAIL OVER RAIL POSTS AND AT LOW END OF OTHER RAILS.

RAILING SHALL BE FABRICATED IN LENGTHS THAT INCLUDE 3 OR 4 POSTS.

TOUCH-UP PAINTING TO BE DONE AT COMPLETION OF STEEL RAILING INSTALLATION TO THE SATISFACTION OF THE ENGINEER AT NO EXTRA COST.

8

| NO. | DATE | REVISION | BY |
|---|---|---|---|
| | | | |

STATE OF WISCONSIN
DEPARTMENT OF TRANSPORTATION
STRUCTURES DESIGN SECTION

STRUCTURE

| CONST. SPEC. 1996 | DRAWN BY | PLANS CK'D. |
|---|---|---|

COMBINATION RAIL TYPE "C1"

SHEET

FILE= RAILCOMB.DGN
SCALE = 1.000

3-02

11 12
1 2 3 4 5