STATE PROJECT NUMBER
- -

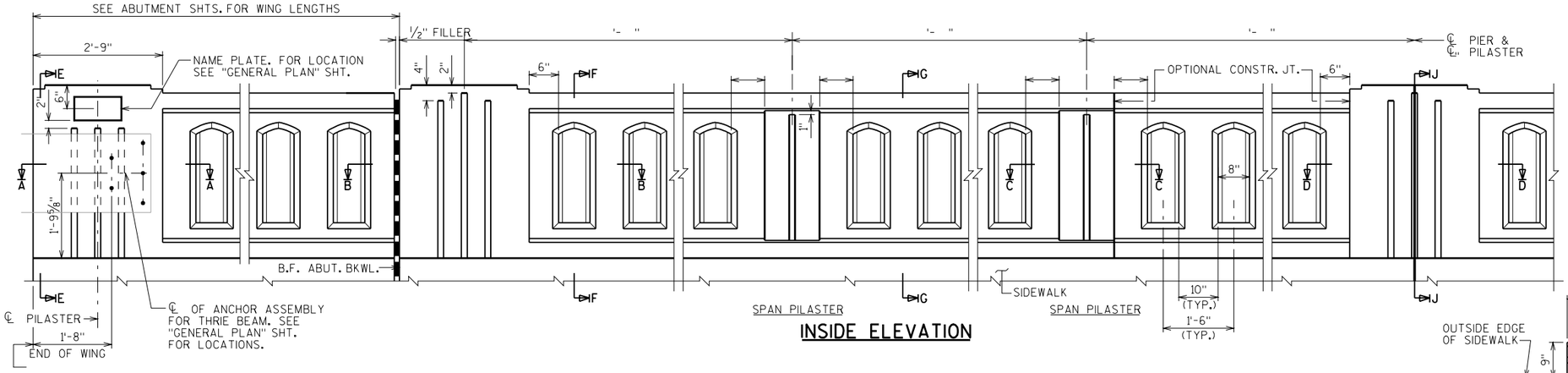

INSIDE ELEVATION

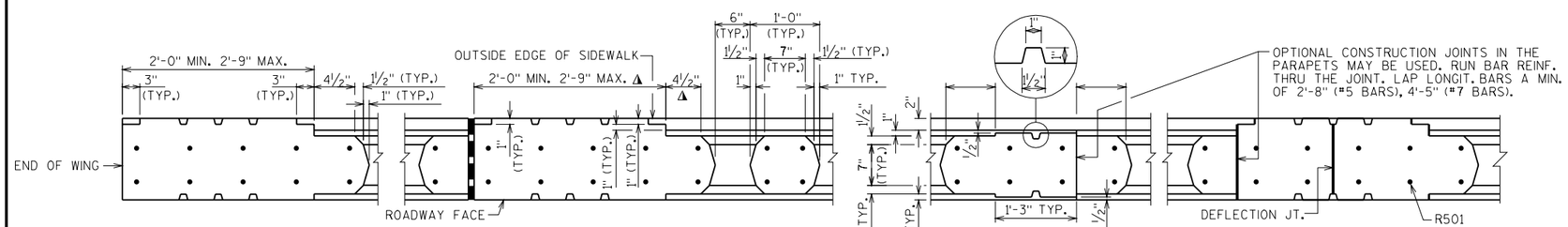

SECTION A-A SECTION B-B SECTION C-C SECTION D-D

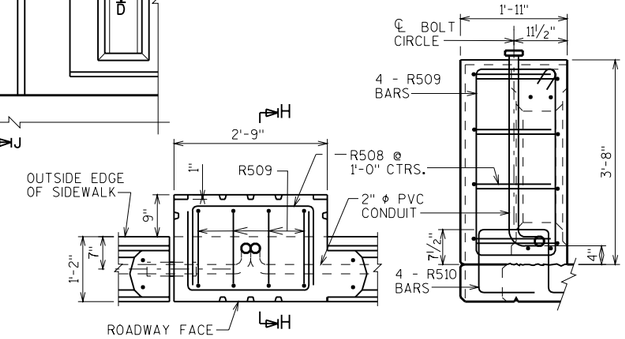

PLAN SECTION H-H

LIGHT STANDARD

BILL OF BARS

BAR MARK	COAT	NO. REQ'D.	LENGTH	BENT	LOCATION
R501	X		8-6	X	PARAPET VERT.
R502	X		3-4	X	PARAPET VERT.
R503	X				PARAPET HORIZ. BOT.
R704	X				PARAPET HORIZ. TOP
R505	X		4-4	X	PARAPET VERT. @ WINGS
R506	X				PARAPET HORIZ. BOT. @ WINGS
R707	X				PARAPET HORIZ. TOP @ WING
R508	X		4-9	X	PARAPET HORIZ. @ LIGHT STD.
R509	X		9-6	X	PARAPET VERT. @ LIGHT STD.
R510	X		4-9	X	PARAPET VERT. @ LIGHT STD.

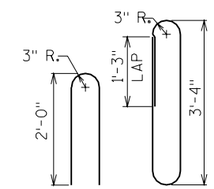

R505 R501

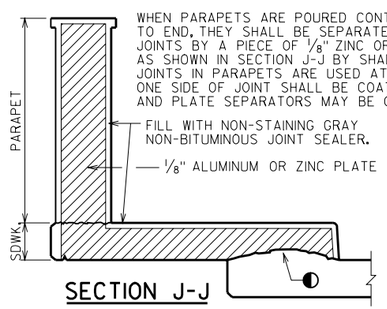

SECTION J-J

(SHOWING DEFLECTION JOINT IN PARAPET AND SIDEWALK.)

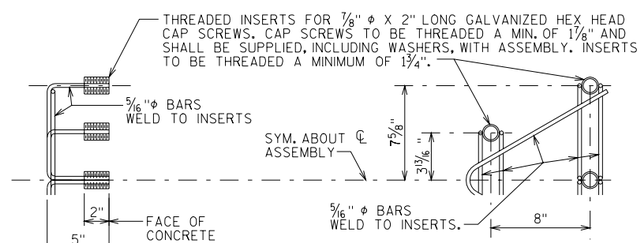

DETAIL OF ANCHOR ASEMBLY

NOTE: HEX HEAD CAP SCREWS & WASHERS TO BE GALVANIZED IN ACCORDANCE WITH AASHTO M232 CLASS C.

ASSEMBLY SHALL BE BID ITEM "ANCHOR ASSEMBLY FOR BEAM GUARD", EACH.

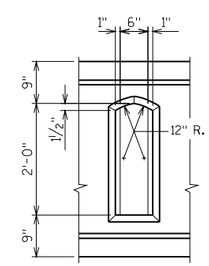

WINDOW DETAILS

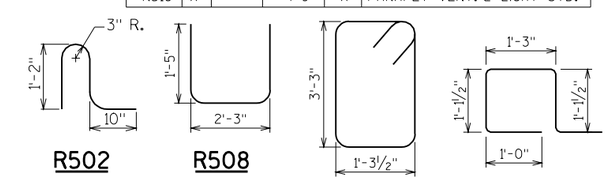

R502 R508 R509 R510

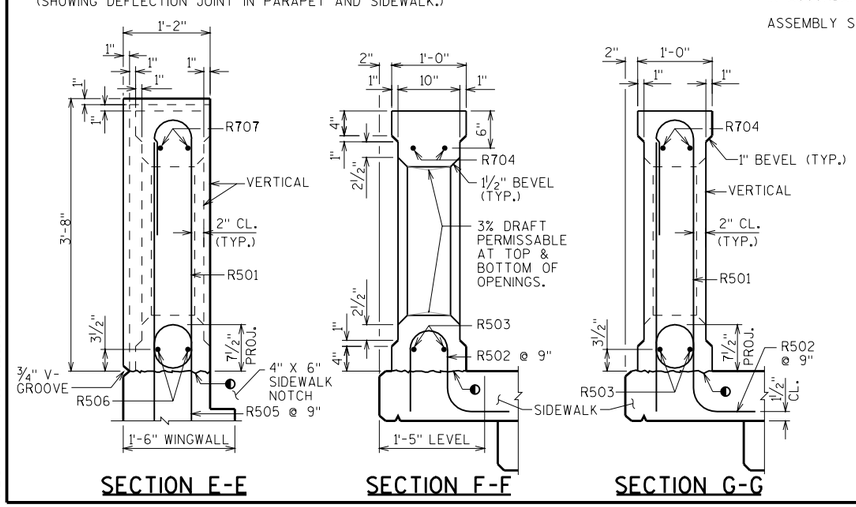

SECTION E-E SECTION F-F SECTION G-G

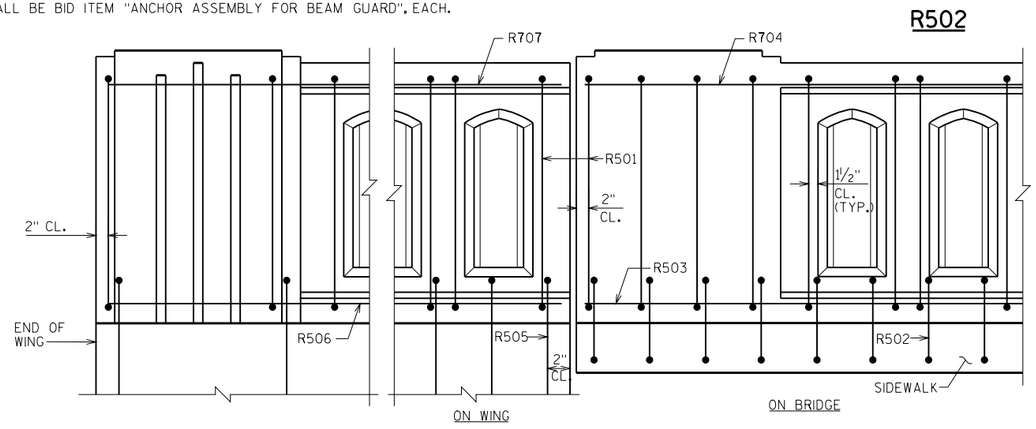

OUTSIDE ELEVATION SHOWING TYPICAL REINFORCEMENT PLACEMENT

NOTES

BID ITEM SHALL BE "VERTICAL FACE PARAPET TYPE "TX", WHICH SHALL INCLUDE ALL ITEMS SHOWN.

ALL REINFORCING STEEL TO BE EPOXY COATED.

◐ HORIZ. CONST. JOINT - STRIKE OFF AS SHOWN AND LEAVE ROUGH.

NO.	DATE	REVISION	BY

STATE OF WISCONSIN
DEPARTMENT OF TRANSPORTATION
STRUCTURES DESIGN SECTION

STRUCTURE

CONST. SPEC. 1996	DRAWN BY	PLANS CK'D.

VERTICAL FACE PARAPET 'TX'

SHEET

8

FILE= RAILTEX.DGN
SCALE =