STATE PROJECT NUMBER
- -

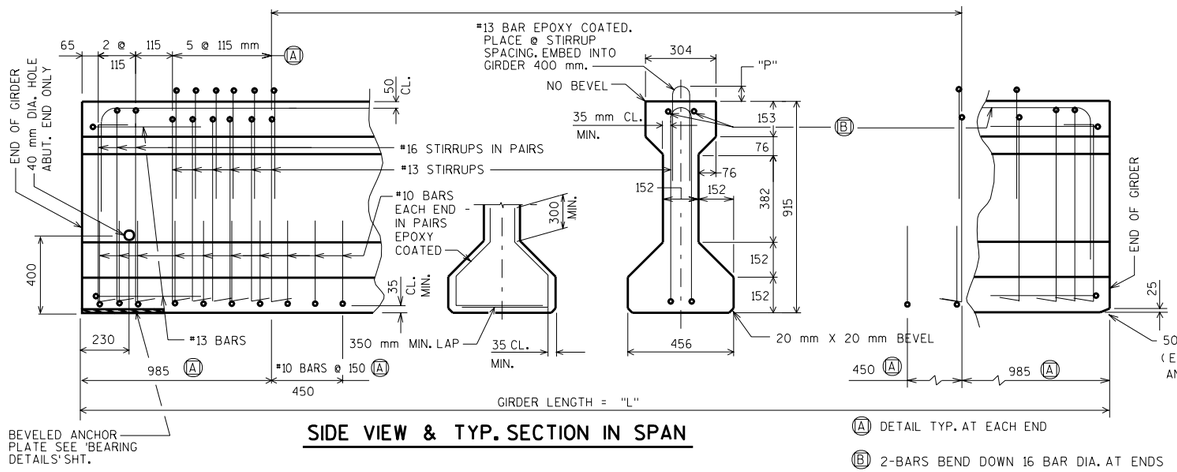

SIDE VIEW & TYP. SECTION IN SPAN

Ⓐ DETAIL TYP. AT EACH END

Ⓑ 2-BARS BEND DOWN 16 BAR DIA. AT ENDS

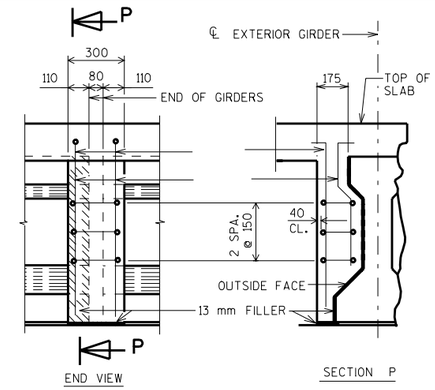

PILASTER DETAILS AT PIERS

GIRDER NOTES

TOP OF GIRDER TO BE ROUGH FLOATED AND BROOMED TRANSVERSELY, EXCEPT THE OUTSIDE 50 mm OF GIRDER, WHICH SHALL BE TROWEL FINISHED.

THE GIRDERS SHALL BE PROVIDED WITH A SUITABLE LIFTING DEVICE FOR HANDLING AND ERECTING THE GIRDERS.

PRESTRESSING STRANDS SHALL BE 13 mm ϕ - 7 WIRE LOW-RELAXATION STRANDS WITH AN ULTIMATE STRENGTH OF 1860 MPa AND SHALL BE FLUSH WITH THE ENDS OF THE GIRDER.

BEND EACH END OF #13 STIRRUPS 120 mm AND #16 STIRRUPS 150 mm

FOR DIAPHRAGM INSERT & CONNECTION DETAILS SEE "STEEL DIAPHRAGM" SHEET.

ALL DIMENSIONS ARE IN MILLIMETERS.

ALL GIRDERS SHALL BE CAST FULL LENGTH AS SHOWN.

SPACING SHOWN FOR #13 STIRRUPS IS FOR GRADE 420 REINFORCEMENT. IF THE FABRICATOR WANTS TO BUILD A BAR STEEL CAGE BY WELDING LONGITUDINAL REINFORCEMENT TO THE #13 STIRRUPS, 2 OPTIONS ARE AVAILABLE:

1. USE ASTM A706M, GRADE 420 REINFORCEMENT AND THE STIRRUP SPACING AS SHOWN ON THE PLANS.
2. USE ASTM A615M, GRADE 300 REINFORCEMENT AND A MODIFIED STIRRUP SPACING SUBMITTED TO AND APPROVED BY THE STRUCTURES DEVELOPMENT SECTION.

AN ALTERNATE EQUIVALENT OF WELDED WIRE FABRIC (WWF) MAY BE SUBSTITUTED FOR THE STIRRUP REINFORCEMENT SHOWN, UPON APPROVAL OF THE STRUCTURES DEVELOPMENT SECTION

WELDED WIRE FABRIC SHALL CONFORM TO THE REQUIREMENTS OF ASTM A497.

ENDS OF STRANDS SHALL BE PAINTED WITH NON-STAINING GRAY NON-BITUMINOUS JOINT SEALER. (THIS APPLIES ONLY TO THOSE ENDS OF GIRDERS THAT ARE FINALLY EXPOSED.)

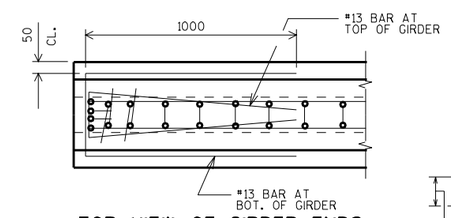

TOP VIEW OF GIRDER ENDS

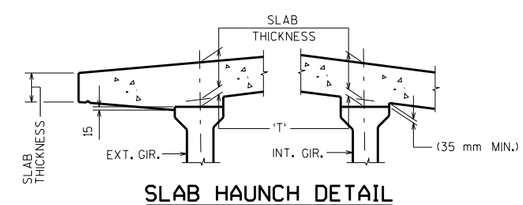

SLAB HAUNCH DETAIL

IF 35 mm MINIMUM HAUNCH HEIGHT AT EDGE OF GIRDER CANNOT BE MAINTAINED, THE GRADE LINE MAY BE REVISED BY THE ENGINEER AT THE OPTION OF THE CONTRACTOR. THE PLAN SLAB THICKNESS SHALL BE HELD. NOTIFY BRIDGE OFFICE FOR HAUNCH HEIGHTS OVER 100 mm.

TO DETERMINE 'T', ELEV. OF TOP OF GIR'S. AT ℄ OF SUBSTRUCTURE UNITS & AT 0.25 POINTS OF EACH SPAN SHALL BE TAKEN. THEN FOLLOW THIS PROCESS:

TOP OF DECK ELEV. AT FINAL GRADE
- TOP OF GIRDER ELEVATION
+ DEAD LOAD DEFLECTION
- SLAB THICKNESS
= HAUNCH HEIGHT 'T'

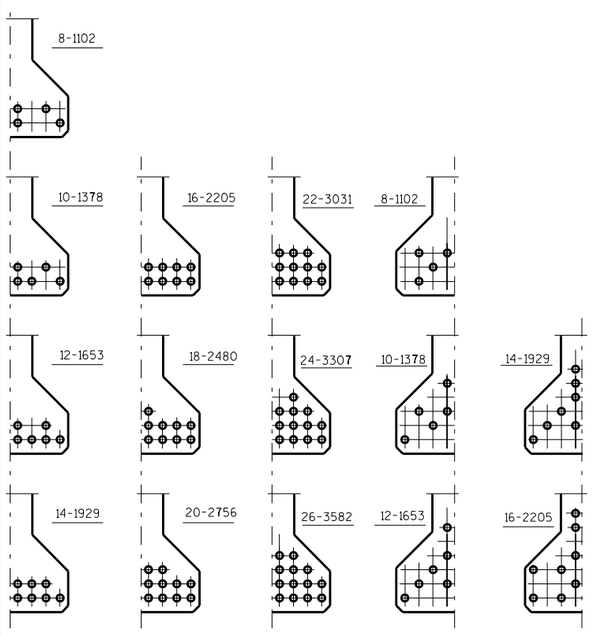

DRAPED PATTERN

UNDRAPED PATTERN

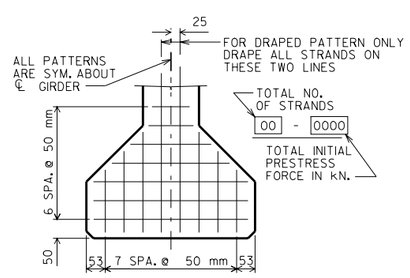

TYP. STRAND PATTERN

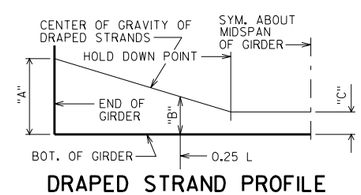

DRAPED STRAND PROFILE

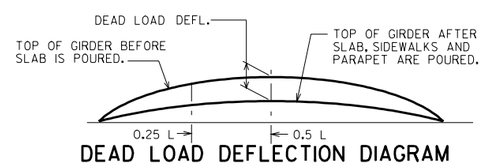

DEAD LOAD DEFLECTION DIAGRAM

✳ MINIMUM CYLINDER STRENGTH OF CONCRETE @ TIME OF TRANSFER OF PRESTRESS FORCE.

GIRDER DATA

SPAN	GIRDER LENGTH "L" (mm)	DEAD LOAD DEFL. (mm)				CONC. STRGTH. f'c (MPa)	"P"	DIA. OF STRAND	DRAPED PATTERN (mm)						UNDRAPED PATTERN	
		.125	.25	.375	.5				TOTAL NO. OF STRANDS	f'ci (MPa) ✳	"A"	"B" MIN.	"B" MAX.	"C"	TOTAL NO. OF STRANDS	f'ci (MPa) ✳
1																

NO.	DATE	REVISION	BY

STATE OF WISCONSIN
DEPARTMENT OF TRANSPORTATION
STRUCTURES DESIGN SECTION

STRUCTURE

CONST. SPEC. 1996	DRAWN BY	PLANS CK'D.

915 mm PRESTRESSED GIRDER DETAILS

SHEET

8

FILE = MG36.DGN
SCALE =
6-01