STATE PROJECT NUMBER
- -

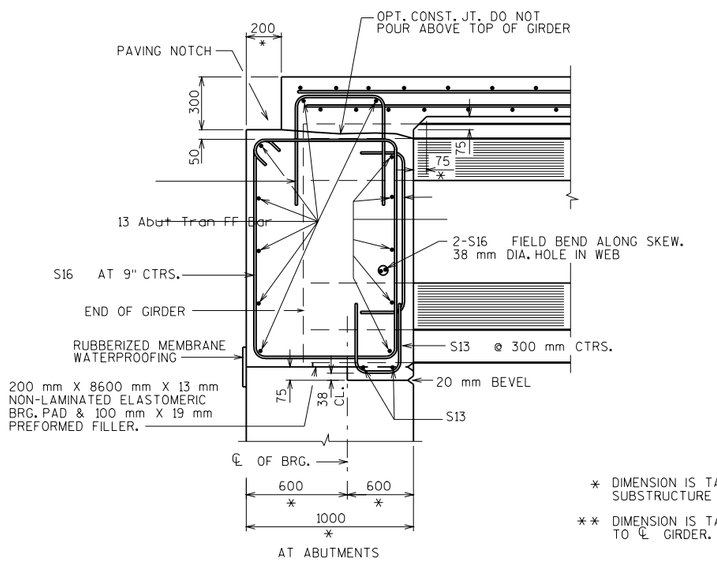

PART LONGIT. SECTION

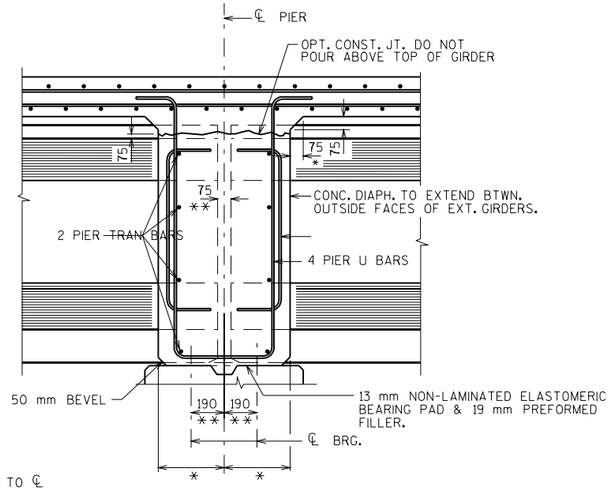

* DIMENSION IS TAKEN NORMAL TO ℄ SUBSTRUCTURE UNITS.

** DIMENSION IS TAKEN PARALLEL TO ℄ GIRDER.

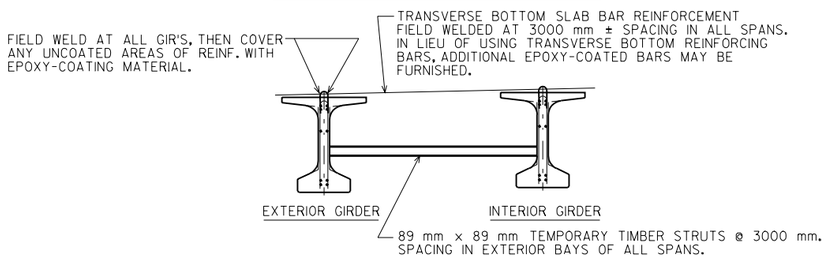

TEMPORARY BRACING DETAIL

REQ'D. IN THOSE AREAS WHERE SLAB OVERHANG FROM ℄ EXTERIOR GIRDER EXCEEDS 1100 mm.

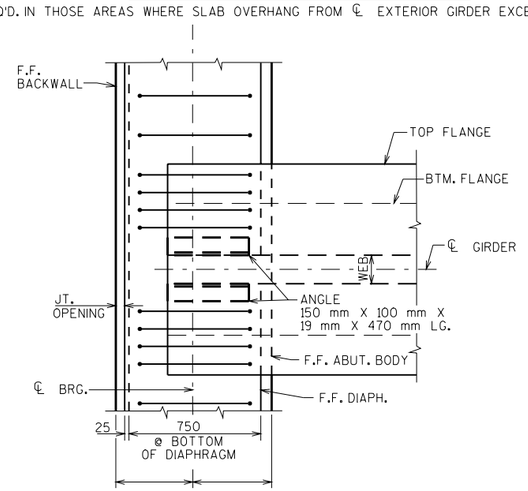

TOP VIEW OF DIAPHRAGM

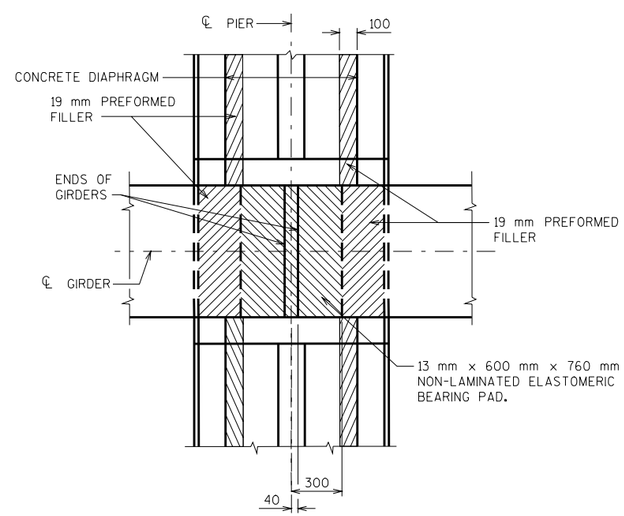

BEARING PAD DETAIL

NO.	DATE	REVISION	BY

STATE OF WISCONSIN
DEPARTMENT OF TRANSPORTATION
STRUCTURES DESIGN SECTION

STRUCTURE

CONST. SPEC.	1996	DRAWN BY	CMPT	PLANS CK'D.

SUPERSTRUCTURE DETAILS

SHEET

8

FILE= MG54WDET.DGN
SCALE =

01-02