STATE PROJECT NUMBER
- -

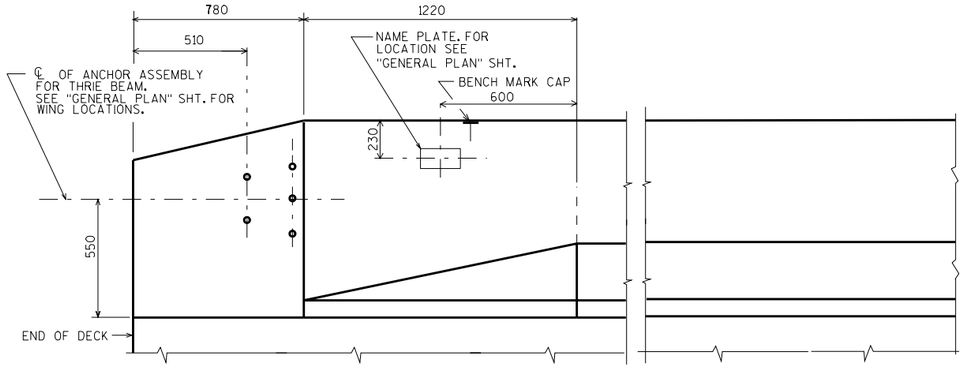

INSIDE ELEVATION

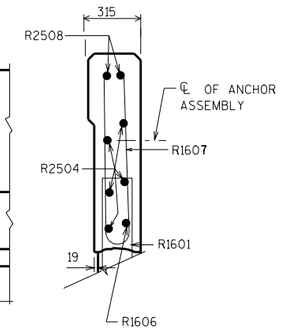

SECTION A

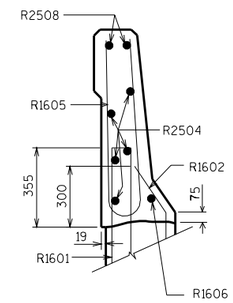

SECTION B

⚠ LENGTH SHOWN FOR BAR IS AN AVERAGE LENGTH AND SHOULD ONLY BE USED FOR BAR WEIGHT CALCULATIONS. SEE BAR SERIES TABLE FOR ACTUAL LENGTHS.

BILL OF BARS

BAR MARK	COAT	NO.	LENGTH	BENT	BAR SERIES	LOCATION
R1601	X		1350	X		PARAPET VERT.
R1602	X		700	X		PARAPET VERT.
R1603	X		1370	X		PARAPET VERT.
R2504	X					PARAPET HORIZ.
R1605	X		1980	X		PARAPET VERT.
R1606	X			X		PARAPET HORIZ.
R1607	X		1720	X	⚠	PARAPET VERT.
R2508	X			X		PARAPET HORIZ.

BAR SERIES TABLE

MARK	NO. REQD.	LENGTH
R1607	4 SERIES OF 6	1460 TO 1980

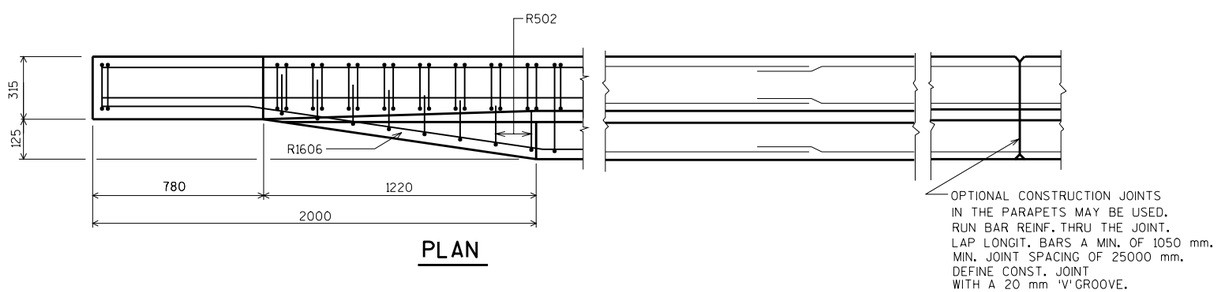

PLAN

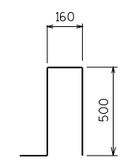

R1601

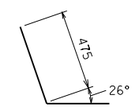

R1602

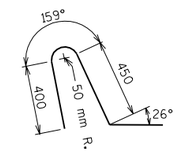

R1603

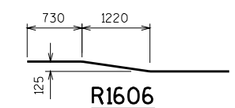

R1606

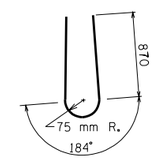

R1605

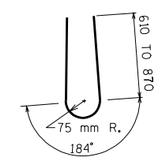

R1607

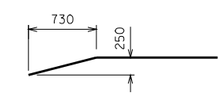

R2508

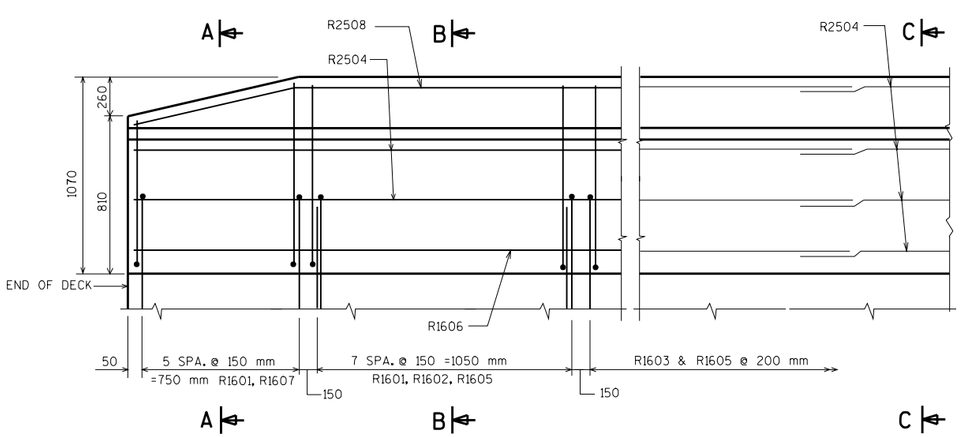

OUTSIDE ELEVATION

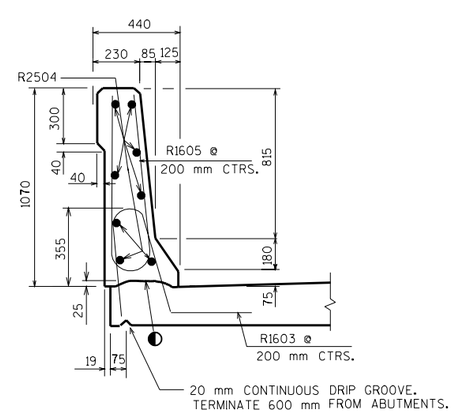

SECTION C

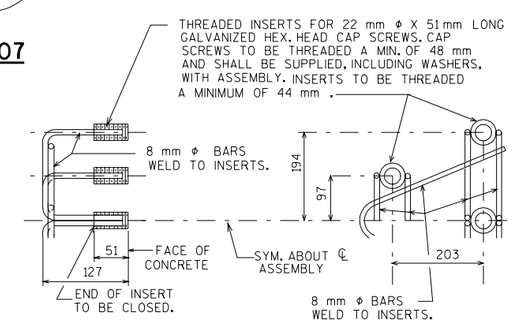

DETAIL OF ANCHOR ASSEMBLY

NOTE: HEX. HEAD CAP SCREWS & WASHERS TO BE GALVANIZED IN ACCORDANCE WITH AASHTO M232 CLASS C.

◐ CONST. JOINT - STRIKE OFF AS SHOWN.

8

NO.	DATE	REVISION	BY

STATE OF WISCONSIN
DEPARTMENT OF TRANSPORTATION
STRUCTURES DESIGN SECTION

STRUCTURE

CONST. SPEC. 1996	DRAWN BY	PLANS CK'D.

SLOPED FACE PARAPET "HF"

SHEET

FILE= MHFDEC.DGN
SCALE =

1-03