STATE PROJECT NUMBER
- -

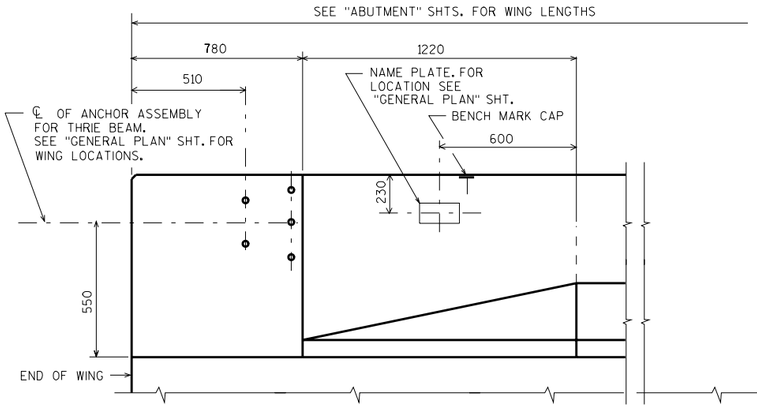

INSIDE ELEVATION

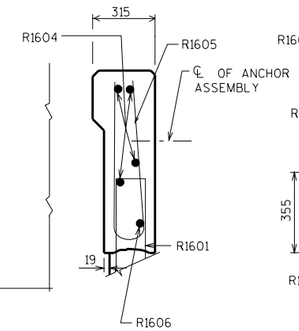

SECTION A

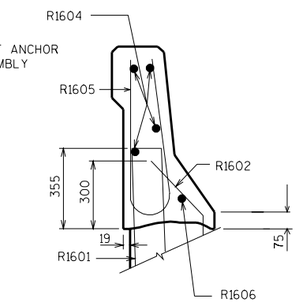

SECTION B

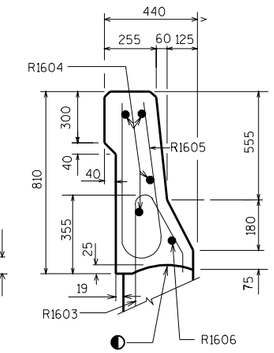

SECTION C

BILL OF BARS

FOR ABUTMENT PARAPETS

BAR MARK	COAT	ABUT.	ABUT.	LENGTH	BENT	LOCATION
R1601	X			1400	X	PARAPET VERT.
R1602	X			700	X	PARAPET VERT.
R1603	X			1370	X	PARAPET VERT.
R1604	X					PARAPET HORIZ.
R1605	X			1470	X	PARAPET VERT.
R1606	X				X	PARAPET HORIZ.

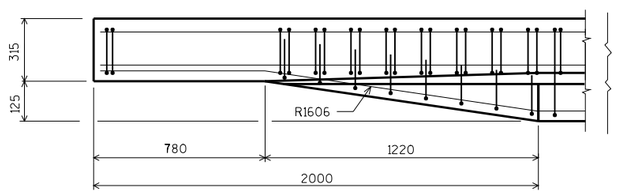

PLAN

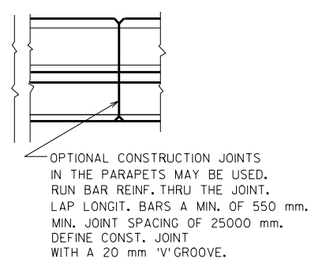

R1601

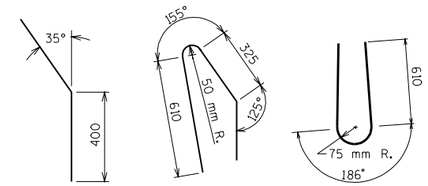

R1602 R1603 R1605

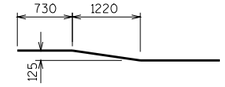

R1606

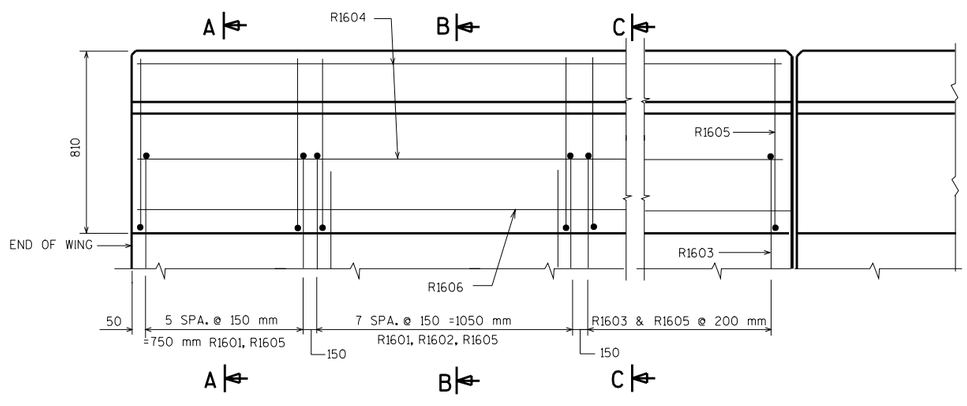

OUTSIDE ELEVATION

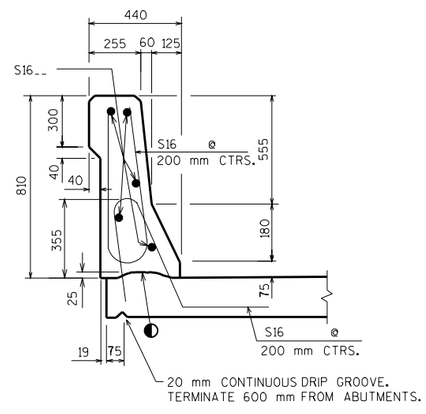

SECTION THRU PARAPET ON BRIDGE

◐ CONST. JOINT - STRIKE OFF AS SHOWN.

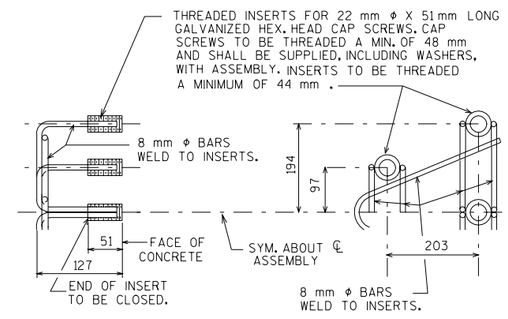

DETAIL OF ANCHOR ASSEMBLY

NOTE: HEX. HEAD CAP SCREWS & WASHERS TO BE GALVANIZED IN ACCORDANCE WITH AASHTO M232 CLASS C.

8

NO.	DATE	REVISION	BY

STATE OF WISCONSIN
DEPARTMENT OF TRANSPORTATION
STRUCTURES DESIGN SECTION

STRUCTURE

CONST. SPEC.	DRAWN BY	PLANS CK'D.
1996		

SLOPED FACE PARAPET "LF"

SHEET

FILE= MLFWIN.DGN
SCALE =

1-03

12