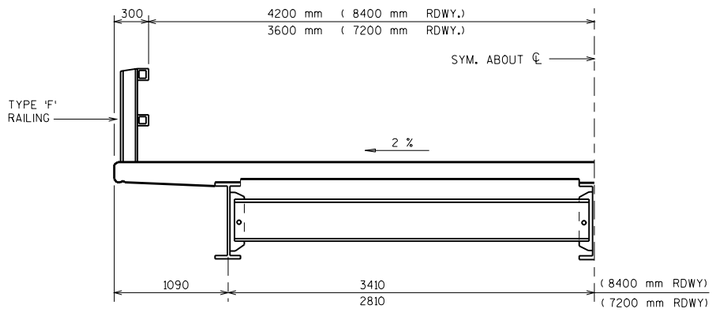

7200 mm & 8400 mm ROADWAY

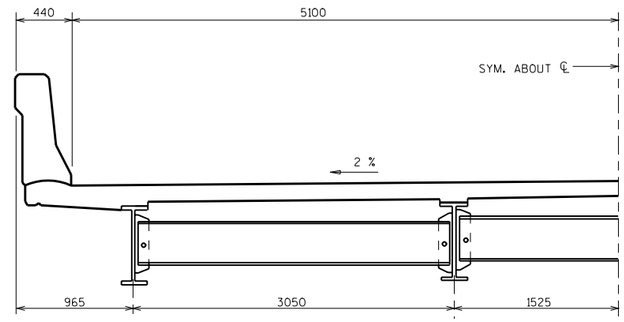

10200 mm ROADWAY

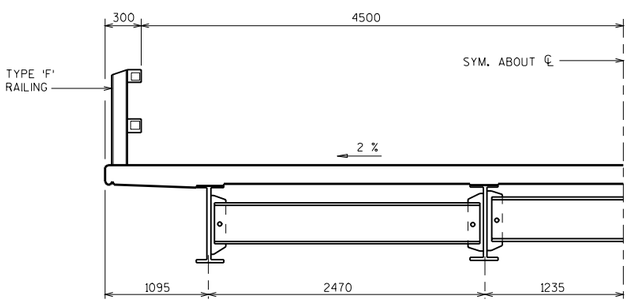

9000 mm ROADWAY

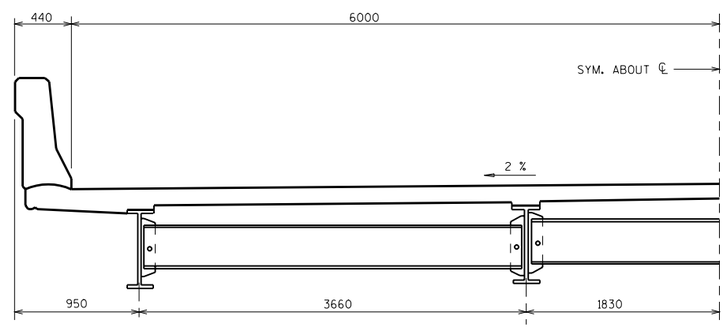

12000 mm ROADWAY

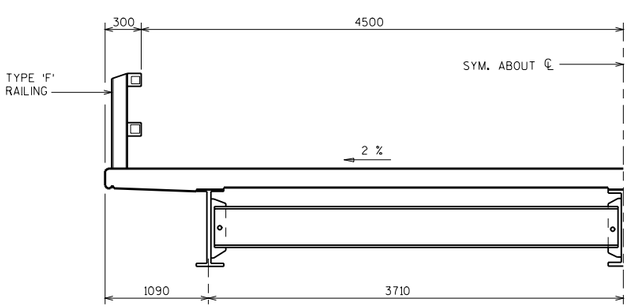

9000 mm ROADWAY

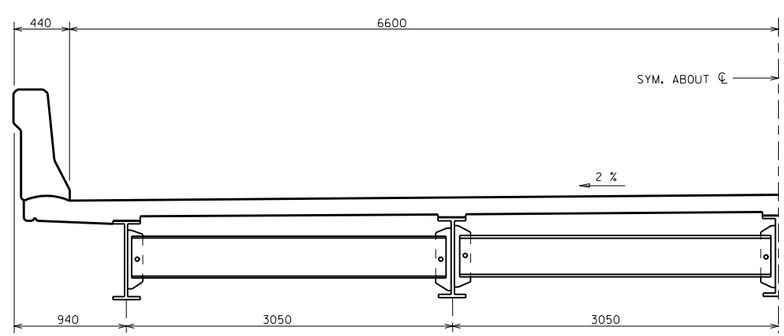

13200 mm ROADWAY

NOTES

GIRDER SPACINGS SHOWN MAY BE MODIFIED BY THE DESIGNER. IF OTHER SPACINGS RESULT IN A MORE ECONOMICAL SECTION.

SEE CHAPTER 17 IN THE BRIDGE MANUAL FOR DECK THICKNESS.

ALL DIMENSIONS ARE IN MILLIMETERS UNLESS SHOWN OTHERWISE.

STEEL GIRDER SUPERSTRUCTURE SECTIONS	
STATE OF WISCONSIN DEPARTMENT OF TRANSPORTATION STRUCTURES DEVELOPMENT SECTION	
APPROVED: _____	DATE: 1/99

METRIC STANDARD 24.1