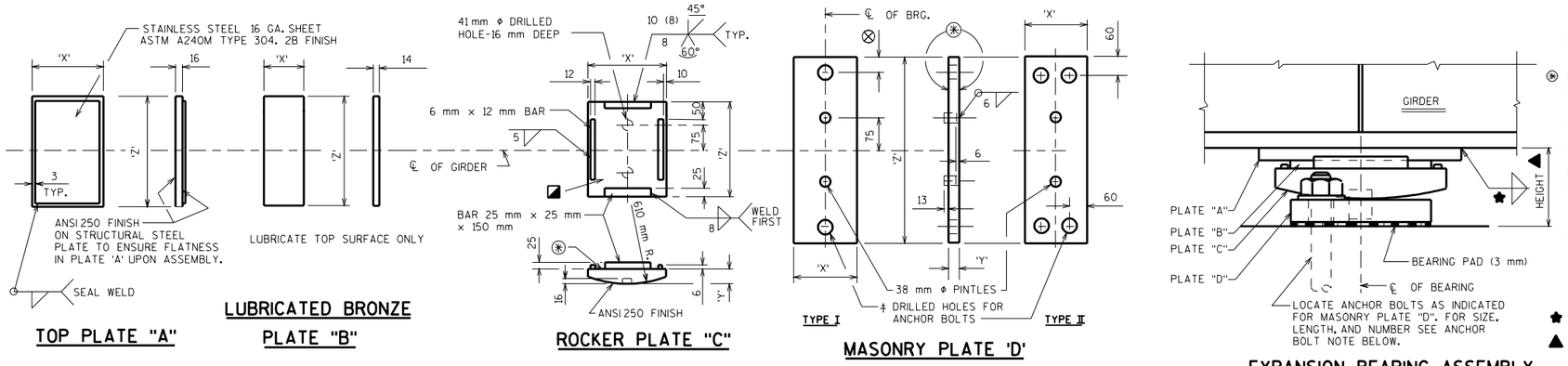

◪ PROVIDE A METHOD FOR HANDLING PLATE "C" DURING GALVANIZING.

EXPANSION BEARING ASSEMBLY

NOTES

FOR BEARING NOTES, CLEARANCE DIAGRAM, AND WHEN TO BEVEL ROCKER PLATES, SEE STANDARD 27.2.

⊛ FINISH THESE SURFACES ANSI 250 IF DIMENSION 'Y' IS GREATER THAN 50 mm.

ANCHOR BOLTS, NUTS AND WASHERS SHALL BE GALVANIZED AS REQUIRED BY ASTM DESIGNATION A153, CLASS "C". PLATE "C" & "D" SHALL BE GALVANIZED. FOR UNPAINTED STRUCTURES PLATE "C" & "D" SHALL BE SHOP PAINTED AFTER GALVANIZING. PLATE "A" SHALL BE SHOP PAINTED. USE WELDABLE PRIMER ON PLATE "A".

AT ABUTMENTS WHEN THE "X" DIMENSION OF PLATE "A" EXCEEDS 280 mm INCREASE STANDARD DISTANCE FROM ℄ BRG. TO END OF GIRDER.

ALL MATERIAL INCLUDING SHIMS, BUT EXCLUDING STAINLESS STEEL SHEET, BRONZE PLATE, PINTLES, ANCHOR BOLTS, NUTS AND WAHSERS SHALL CONFORM TO ASTM A709 GRADE 345W.

⬟ WELD SIZE, REFER TO STANDARD 24.2.

▲ ADJUST HEIGHT IF TAPERED BEARINGS ARE REQUIRED.

FABRICATOR MAY INCREASE PLATE "A" OR PLATE "D" THICKNESS AS AN ALTERNATE TO SHIMS.

⊗ DIMENSION IS 50 mm WHEN 32 mm Φ ANCHOR BOLTS ARE USED AND 60 mm WHEN 38 mm Φ ANCHOR BOLTS ARE USED.

ALL DIMENSIONS ARE IN MILLIMETERS.

250 mm BEARING

CAP.	PLATE A		PLATE B		PLATE C			PLATE D			HEIGHT
kN	X	Z	X	Z	X	Y	Z	X	Y	Z	(mm)
325	230	250	130	250	180	38	310	205	38	510	111
455	280	250	180	250	230	43	310	205	38	510	116
580	330	250	230	250	280	57	310	205	38	510	130
705	380	250	280	250	330	67	310	230	38	510	140
830	430	250	330	250	380	77	310	255	45	510	157
960	480	250	380	250	430	107	310	305	50	510	192
1085	530	250	430	250	480	107	310	330	67	510	209
1210	580	250	480	250	530	127	310	380	67	510	229
1340	630	250	530	250	580	127	310	405	87	510	249

300 mm BEARING

CAP.	PLATE A		PLATE B		PLATE C			PLATE D			HEIGHT
kN	X	Z	X	Z	X	Y	Z	X	Y	Z	(mm)
395	230	300	130	300	180	38	360	205	38	560	111
545	280	300	180	300	230	43	360	205	38	560	116
700	330	300	230	300	280	57	360	205	38	560	130
850	380	300	280	300	330	67	360	230	38	560	140
1000	430	300	330	300	380	77	360	280	50	560	162
1155	480	300	380	300	430	107	360	330	67	560	209
1305	530	300	430	300	480	107	360	355	67	560	209
1460	580	300	480	300	530	127	360	405	87	560	249
1610	630	300	530	300	580	127	360	430	87	585	249

350 mm BEARING

CAP.	PLATE A		PLATE B		PLATE C			PLATE D			HEIGHT
kN	X	Z	X	Z	X	Y	Z	X	Y	Z	(mm)
460	230	350	130	350	180	38	410	205	38	610	111
640	280	350	180	350	230	43	410	205	38	610	116
820	330	350	230	350	280	57	410	205	38	610	130
995	380	350	280	350	330	67	410	255	45	610	147
1175	430	350	330	350	380	77	410	305	50	610	162
1350	480	350	380	350	430	107	410	330	67	610	209
1530	530	350	430	350	480	107	410	380	67	635	209
1705	580	350	480	350	530	127	410	405	87	635	249
1885	630	350	530	350	580	127	410	455	87	635	249

400 mm BEARING

CAP.	PLATE A		PLATE B		PLATE C			PLATE D			HEIGHT
kN	X	Z	X	Z	X	Y	Z	X	Y	Z	(mm)
530	230	400	130	400	180	38	460	205	38	660	111
730	280	400	180	400	230	43	460	205	38	660	116
935	330	400	230	400	280	57	460	230	38	660	130
1140	380	400	280	400	330	67	460	280	50	660	152
1345	430	400	330	400	380	77	460	305	50	660	162
1550	480	400	380	400	430	107	460	355	67	685	209
1750	530	400	430	400	480	107	460	380	67	685	209
1955	580	400	480	400	530	127	460	430	87	685	249
2160	630	400	530	400	580	127	460	480	87	685	249

450 mm BEARING

CAP.	PLATE A		PLATE B		PLATE C			PLATE D			HEIGHT
kN	X	Z	X	Z	X	Y	Z	X	Y	Z	(mm)
595	230	450	130	450	180	38	510	205	38	710	111
825	280	450	180	450	230	43	510	205	38	710	116
1055	330	450	230	450	280	57	510	230	38	710	130
1285	380	450	280	450	330	67	510	280	50	710	152
1515	430	450	330	450	380	77	510	330	67	735	179
1745	480	450	380	450	430	107	510	355	67	735	209
1975	530	450	430	450	480	107	510	405	87	735	229
2205	580	450	480	450	530	127	510	455	87	735	249
2430	630	450	530	450	580	127	510	505	87	735	249

500 mm BEARING

CAP.	PLATE A		PLATE B		PLATE C			PLATE D			HEIGHT
kN	X	Z	X	Z	X	Y	Z	X	Y	Z	(mm)
665	230	500	130	500	180	38	560	205	38	760	111
920	280	500	180	500	230	43	560	205	38	760	116
1175	330	500	230	500	280	57	560	255	45	760	137
1430	380	500	280	500	330	67	560	280	50	760	152
1685	430	500	330	500	380	77	560	330	67	785	179
1940	480	500	380	500	430	107	560	380	67	785	209
2195	530	500	430	500	480	107	560	430	87	785	229
2450	580	500	480	500	530	127	560	480	87	785	249
2705	630	500	530	500	580	127	560	530	107	785	269

ANCHOR BOLT NOTES:

FOR SPAN LENGTHS UP TO 30500 mm, USE A TYPE I MASONRY PLATE 'D' WITH (2)-32 mm Φ x 435 mm LONG ANCHOR BOLTS.

FOR SPAN LENGTHS FROM 30500 mm UP TO 45500 mm, USE A TYPE I MASONRY PLATE 'D' WITH (2)-38 mm Φ x 560 mm LONG ANCHOR BOLTS.

FOR SPAN LENGTHS GREATER THAN 45500 mm , USE A TYPE II MASONRY PLATE "D" WITH (4)-38 mm Φ x 560 mm LONG ANCHOR BOLTS.

‡DRILLED HOLES FOR ANCHOR BOLTS IN MASONRY PLATE 'D' SHALL HAVE A DIAMETER 10 mm LARGER THAN ANCHOR BOLT.

EXPANSION BEARING DETAILS
TYPE 'A'-STEEL GIRDERS

STATE OF WISCONSIN
DEPARTMENT OF TRANSPORTATION
STRUCTURES DEVELOPMENT SECTION

APPROVED: _____

DATE: 1/99