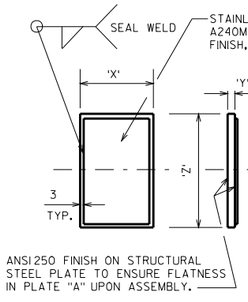

TOP PLATE 'A'

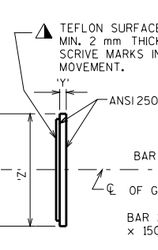

TEFLON COATED PLATE 'B'

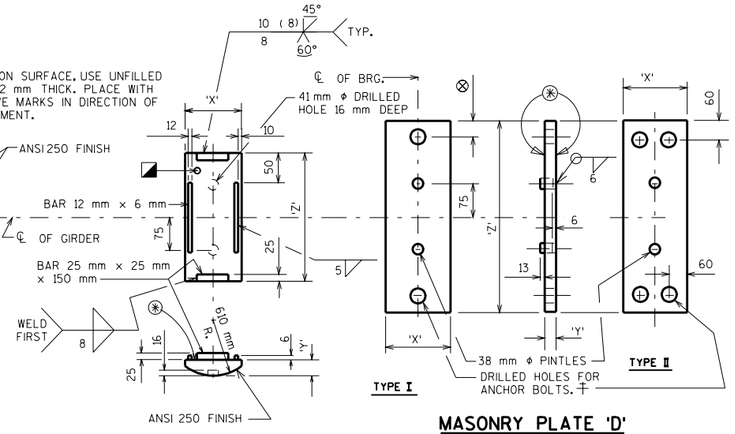

ROCKER PLATE 'C'

MASONRY PLATE 'D'

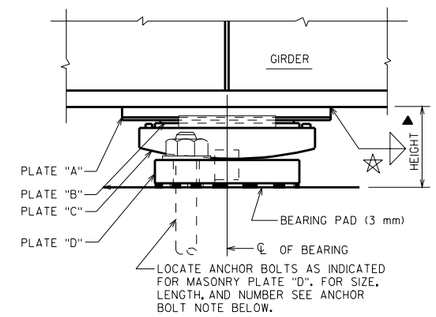

EXPANSION BEARING ASSEMBLY

NOTES

FOR BEARING NOTES, CLEARANCE DIAGRAM, AND WHEN TO BEVEL ROCKER PLATES, SEE STANDARD 27.2.

⊗ FINISH THESE SURFACES ANSI 250 IF DIMENSION "Y" IS GREATER THAN 50 mm.

ANCHOR BOLTS, NUTS AND WASHERS SHALL BE GALVANIZED AS REQUIRED BY ASTM DESIGNATION A153, CLASS "C". PLATE "C" & "D" SHALL BE GALVANIZED. FOR UNPAINTED STRUCTURES PLATE "C" & "D" SHALL BE SHOP PAINTED AFTER GALVANIZING. PLATE "A" & "B" SHALL BE SHOP PAINTED. USE WELDABLE PRIMER ON PLATE "A".

AT ABUTMENTS WHEN THE "X" DIMENSION OF PLATE "A" EXCEEDS 280 mm INCREASE STANDARD DISTANCE FROM ℄ BRG. TO END OF GIRDER.

ALL MATERIAL INCLUDING SHIMS, BUT EXCLUDING STAINLESS STEEL SHEET, TEFLON SURFACE, PINTLES, ANCHOR BOLTS, NUTS AND WASHERS SHALL CONFORM TO ASTM A709M GRADE 345W.

☆ WELD SIZE, REFER TO STANDARD 24.2.

▲ ADJUST HEIGHT IF TAPERED BEARINGS ARE REQUIRED.

FABRICATOR MAY INCREASE PLATE "A" OR PLATE "D" THICKNESS AS AN ALTERNATE TO SHIMS.

⊗ DIMENSION IS 50 mm WHEN 32 mm Φ ANCHOR BOLTS ARE USED AND 60 mm WHEN 38 mm Φ ANCHOR BOLTS ARE USED.

ALL MATERIALS IN TYPE "A-T" BEARINGS, INCLUDING SHIMS, SHALL BE PAID FOR AT THE UNIT PRICE BID FOR "EXPANSION BEARING ASSEMBLIES".

ALL DIMENSIONS ARE IN MILLIMETERS.

250 mm BEARING

CAP. kN	PLATE A			PLATE B			PLATE C			PLATE D			HEIGHT (mm)
	X	Y	Z	X	Y	Z	X	Y	Z	X	Y	Z	
355	230	16	250	130	14	250	180	38	310	205	38	510	113
635	330	16	250	230	14	250	280	57	310	205	38	510	132
910	430	16	250	330	14	250	380	87	310	280	50	510	174

300 mm BEARING

CAP. kN	PLATE A			PLATE B			PLATE C			PLATE D			HEIGHT (mm)
	X	Y	Z	X	Y	Z	X	Y	Z	X	Y	Z	
445	230	16	300	130	14	300	180	38	360	205	38	560	113
620	280	16	300	180	14	300	230	48	360	205	38	560	123
965	380	16	300	280	14	300	330	77	360	280	50	560	164

350 mm BEARING

CAP. kN	PLATE A			PLATE B			PLATE C			PLATE D			HEIGHT (mm)
	X	Y	Z	X	Y	Z	X	Y	Z	X	Y	Z	
745	280	16	350	180	14	350	230	48	410	205	38	610	123
1365	430	16	350	330	14	350	380	87	410	355	67	610	191
1775	530	16	350	430	14	350	480	107	410	430	87	635	231

▲ BOND STEEL AND TEFLON WITH ADHESIVE MATERIAL MEETING FED. SPEC. MMM-A-134, FEP FILM OR EQUAL.

◪ PROVIDE A METHOD FOR HANDLING PLATE "C" DURING GALVANIZING.

400 mm BEARING

CAP. kN	PLATE A			PLATE B			PLATE C			PLATE D			HEIGHT (mm)
	X	Y	Z	X	Y	Z	X	Y	Z	X	Y	Z	
865	280	16	400	180	14	400	230	48	460	205	38	660	123
1350	380	16	400	280	14	400	330	77	460	305	50	685	164
1835	480	16	400	380	14	400	430	107	460	405	87	685	231
2075	530	16	400	430	14	400	480	107	460	455	87	685	231

450 mm BEARING

CAP. kN	PLATE A			PLATE B			PLATE C			PLATE D			HEIGHT (mm)
	X	Y	Z	X	Y	Z	X	Y	Z	X	Y	Z	
990	280	16	450	180	14	450	230	48	510	230	38	710	123
1265	330	16	450	230	14	450	280	57	510	280	50	710	144
2095	480	16	450	380	14	450	430	107	510	430	87	735	231
2645	580	16	450	480	14	450	530	137	510	560	107	735	281

500 mm BEARING

CAP. kN	PLATE A			PLATE B			PLATE C			PLATE D			HEIGHT (mm)
	X	Y	Z	X	Y	Z	X	Y	Z	X	Y	Z	
805	230	16	500	130	14	500	180	38	560	205	38	760	113
1115	280	16	500	180	14	500	230	48	560	230	38	760	123
1735	380	16	500	280	14	500	330	77	560	330	67	785	181
2355	480	16	500	380	14	500	430	107	560	455	87	785	231
2975	580	16	500	480	14	500	530	137	560	585	107	785	281

ANCHOR BOLT NOTES

FOR SPAN LENGTHS UP TO 30500 mm , USE A TYPE I MASONRY PLATE "D" WITH 2 - 32 mm Φ x 435 mm LONG ANCHOR BOLTS.

FOR SPAN LENGTHS FROM 30500 mm UP TO 45500 mm , USE A TYPE II MASONRY PLATE "D" WITH 2 - 38 mm Φ x 560 mm LONG ANCHOR BOLTS.

FOR SPAN LENGTHS GREATER THAN 45500 mm ; USE A TYPE II MASONRY PLATE "D" WITH 4 - 38 mm Φ x 560 mm LONG ANCHOR BOLTS

✝ DRILLED HOLES FOR ANCHOR BOLTS IN MASONRY PLATE "D" SHALL HAVE A DIAMETER 10 mm LARGER THAN ANCHOR BOLT.

STAINLESS STEEL - TFE EXPANSION BEARING DETAILS TYPE "A-T"

STATE OF WISCONSIN
DEPARTMENT OF TRANSPORTATION
STRUCTURES DEVELOPMENT SECTION

APPROVED: _____ DATE: 1/99