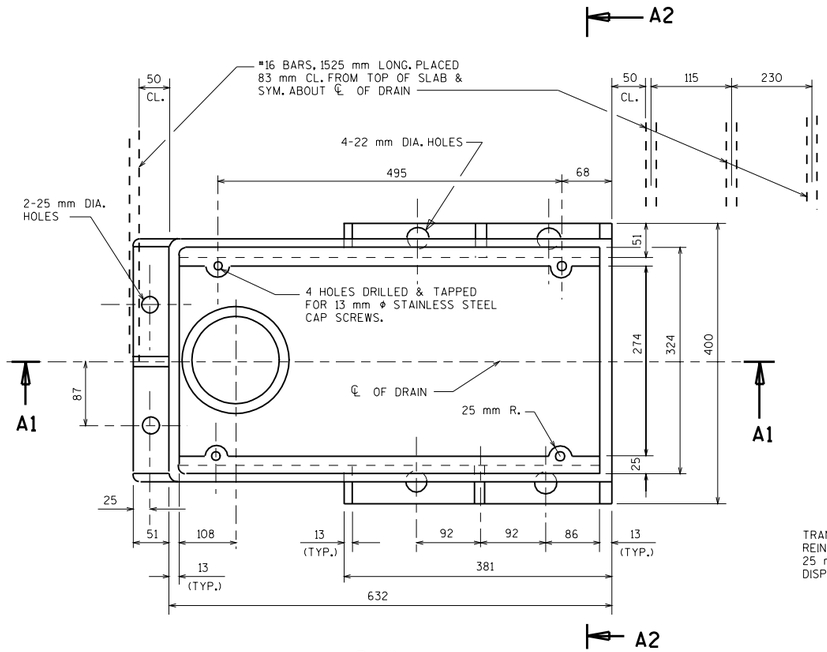

PLAN

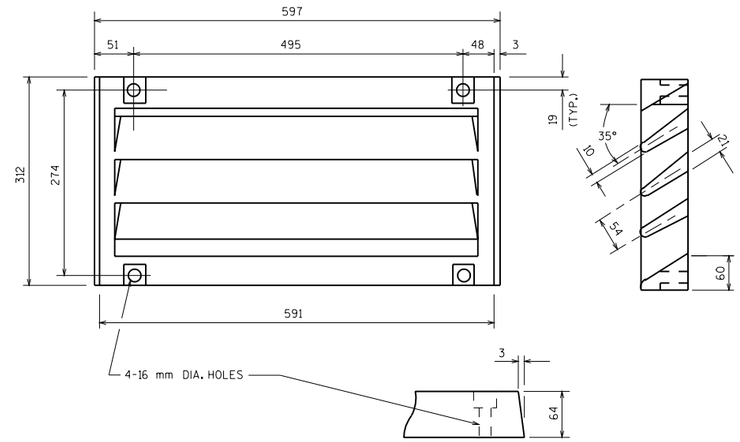

GRATE CASTING DETAIL

ATTACH GRATE TO FRAME FOR SHIPMENT

TRANS. AND LONGIT. SLAB BAR REINF. TO BE CUT A MAX. OF 25 mm CL. FROM DRAIN FRAME. DISPLACE BARS WHERE POSSIBLE.

GENERAL NOTES

ALL MATERIAL FOR TYPE "GC" CASTING, EXCLUDING GRATE HOLD DOWN SCREWS, SHALL BE GRAY IRON CONFORMING TO ASTM A48, CLASS 30. (APPROXIMATE MASS = 102 kg)

MATERIAL FOR BRACKETS SHALL CONFORM TO ASTM A36M.

THE CONTRACTOR MAY PROPOSE AN ALTERNATE TYPE OF BRACKET. THE PROPOSED ALTERNATE DETAILS SHALL BE SUBMITTED AND SUBJECT TO THE APPROVAL OF THE ENGINEER.

FLANGED 152 mm DIA. DOWNSPOUTS SHALL BE EITHER CAST MATERIAL OR FIBERGLASS CONFORMING TO ASTM D2996, GRADE 1, CLASS A.

ALL DIMENSIONS ARE IN MILLIMETERS.

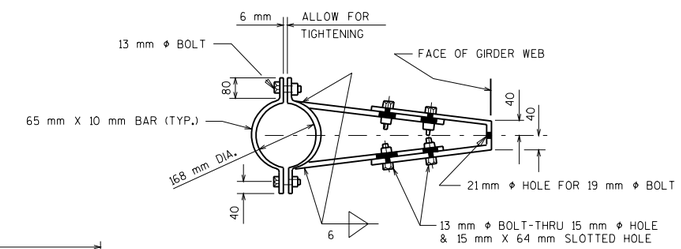

BRACKET DETAIL

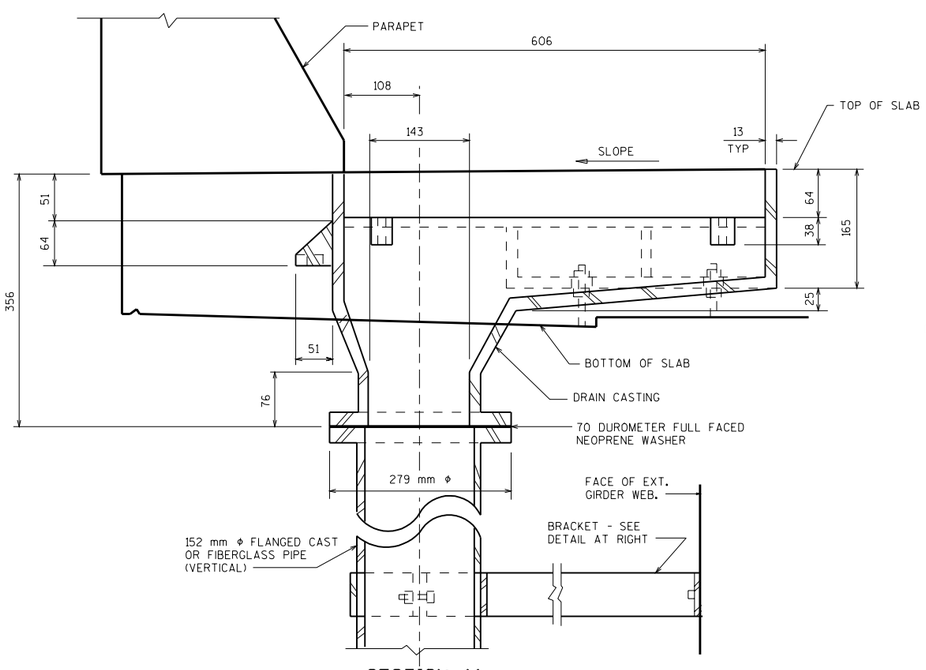

SECTION A1

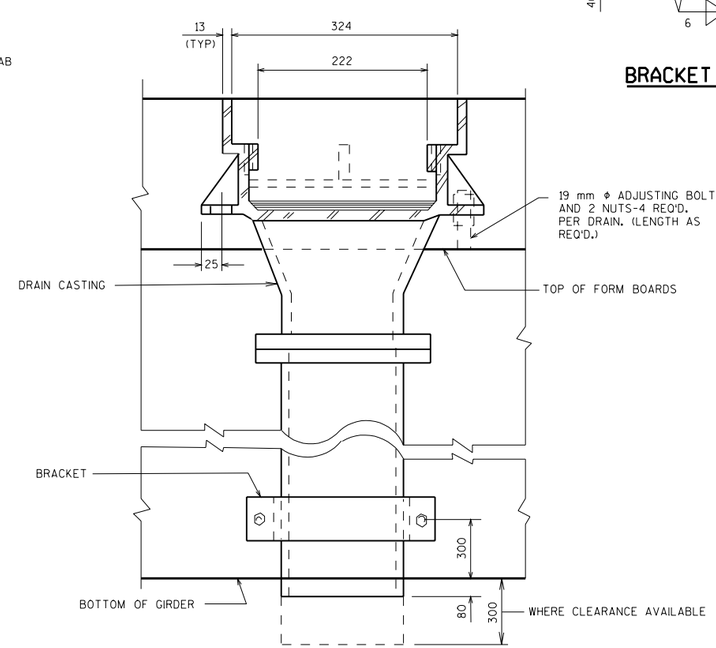

SECTION A2

FLOOR DRAIN TYPE "GC"	
STATE OF WISCONSIN DEPARTMENT OF TRANSPORTATION STRUCTURES DEVELOPMENT SECTION	
APPROVED: _____	DATE: 1/99

METRIC STANDARD 29.1