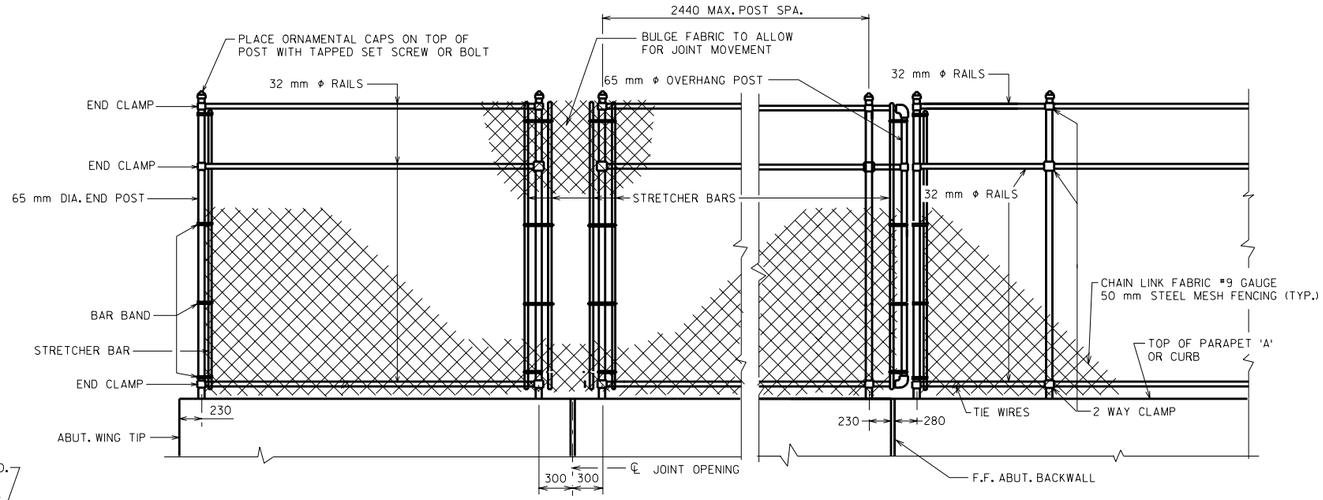

DETAIL "B"

EXPANSION JOINT OPENING ≤ 50 mm OF MOVEMENT. (FOR FIXED JOINTS MAINTAIN TYP. VERT. POST SPA. ACROSS JOINT AND PLACE STRETCHER BAR ON END POST.) DETAIL "C" MAY BE SUBSTITUTED FOR DETAIL "B".

DETAIL "C"

EXPANSION JOINT MAX. OPENING > 50 mm. FOR MAX. JOINT OPENINGS > 150 mm DESIGN FENCE TO OVERLAP.

FENCE PART ELEVATION

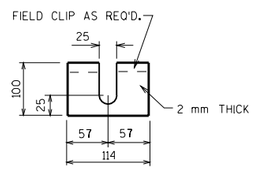

POST SHIM DETAILS

SHIMS REQUIRED ONLY WHEN POSTS ARE WELDED TO BASE PLATES. PROVIDE 4 SHIMS PER POST.

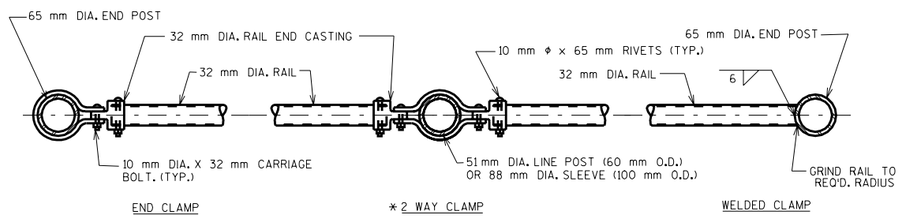

PLAN OF RAILING

NOTE: PLACE ALL NUTS ON OUTSIDE OF FENCE

GENERAL NOTES

POSTS ARE TO BE SET VERTICAL.

KNUCKLE TOP AND BOTTOM OF 50 mm MESH CHAIN LINK FENCING.

ALL FENCING COMPONENTS SHALL BE GALVANIZED STEEL OR APPROVED ALTERNATE LISTED BELOW.

ALL RAILS, POSTS AND SLEEVES ARE STANDARD WEIGHT PIPE. SCHEDULE 40.

PLACE ALL NUTS ON OUTSIDE OF FENCE.

TOP RAIL SHALL BE CONTINUOUS OVER INTERIOR POSTS. MINIMUM LENGTH OF TOP RAIL BETWEEN SPLICES SHALL BE 6096 mm. PLACE TOP RAIL SPLICES NEAR 1/4 POINTS OF POST SPACING. NO 9 GAGE TIES AT 230 mm SPACING REQ'D. ON RAILS & POSTS WITHOUT STRETCHER BARS.

ALTERNATE FENCING MATERIALS ARE ALUMINUM, ALUMINUM COATED STEEL, AND APPROVED COLOR COATING SYSTEMS. IF ALTERNATE MATERIALS ARE USED FOR POSTS & RAILS, THESE ELEMENTS SHOULD BE DESIGNED.

PEDESTRIAN RAILING MAY BE USED ON WINGWALL PARAPETS IF CHAIN LINK FENCE DOES NOT CONTINUE BEYOND BRIDGE.

HANDRAILS SHALL BE USED ALONG BRIDGE SIDEWALKS WHERE THE SLOPE OF THE SIDEWALK IS GREATER THAN 5%. TOP OF HANDRAIL GRIPPING SURFACES SHALL BE MOUNTED BETWEEN 760 mm & 865 mm ABOVE SIDEWALK SURFACE. USE 760 mm NEAR SCHOOL ZONES. IF FEASIBLE, HANDRAILS SHALL BE PROVIDED ALONG BOTH SIDES OF SIDEWALK. FOR HANDRAIL DETAILS SEE STANDARD 37.2.

ALL DIMENSIONS ARE IN MILLIMETERS.

* ALTERNATE BOULEVARD 2-WAY CLAMP MAY BE USED WHEN THE POST IS EITHER BOLTED TO THE 88 mm Φ PIPE SLEEVE OR DIRECTLY WELDED TO THE BASE PLATE.

◭ 13 mm DIA. X 175 mm LONG GALVANIZED HEX BOLT WITH NUT & WASHER. TYPE S, 13 mm Φ CONCRETE MASONRY ANCHORS MAY BE SUBSTITUTED FOR 13 mm Φ BOLTS. ANCHOR PLATE NOT REQUIRED WHEN TYPE S ANCHORS ARE USED. SEE ✿

✿ 13 mm Φ CONCRETE MASONRY ANCHOR, TYPE "S", 150 mm EMBEDMENT (EPOXY ANCHORED) MIN. PULLOUT OF 44.5 kN. THREADED LENGTH OF ANCHOR, WASHER, AND NUT SHALL BE GALVANIZED.

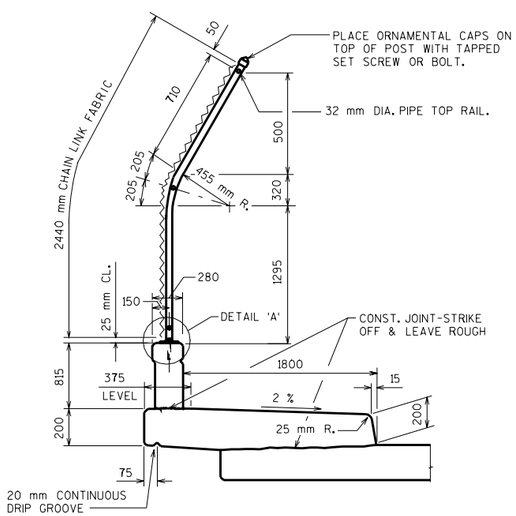

SECTION THRU FENCE

NOTE: FOR NON-SIDEWALK APPLICATIONS USE VERTICAL POSTS. (NO BEND)

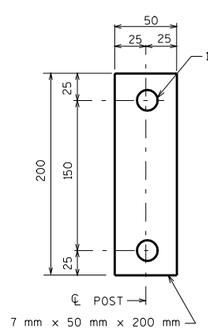

ANCHOR PLATE

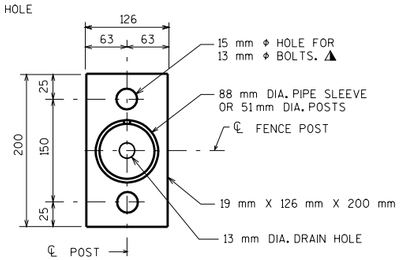

BASE PLATE

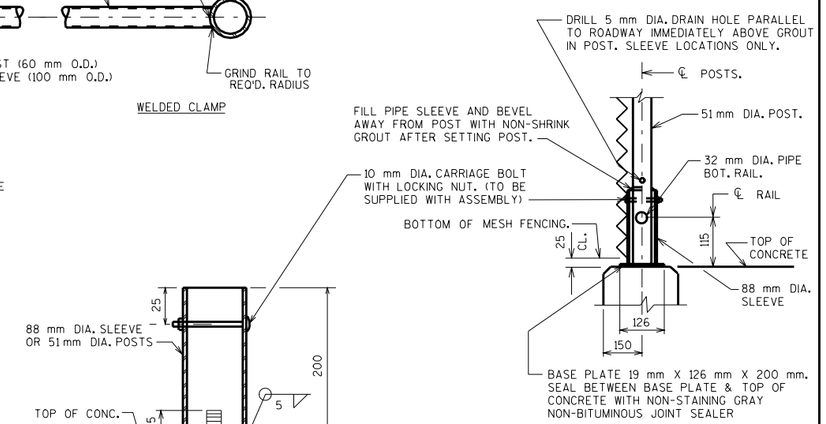

DETAIL A

ELEVATION

POST ATTACHMENT

UNIT SHALL BE GALV. AFTER FABRICATION

NOTE: IN LIEU OF USING THE 3½" Φ SLEEVE, THE 2" Φ FENCE POST MAY BE WELDED TO THE BASE PLATE.

CHAIN LINK FENCE DETAILS	
STATE OF WISCONSIN DEPARTMENT OF TRANSPORTATION STRUCTURES DEVELOPMENT SECTION	
APPROVED: _____	DATE: 1-03

METRIC STANDARD 30.11