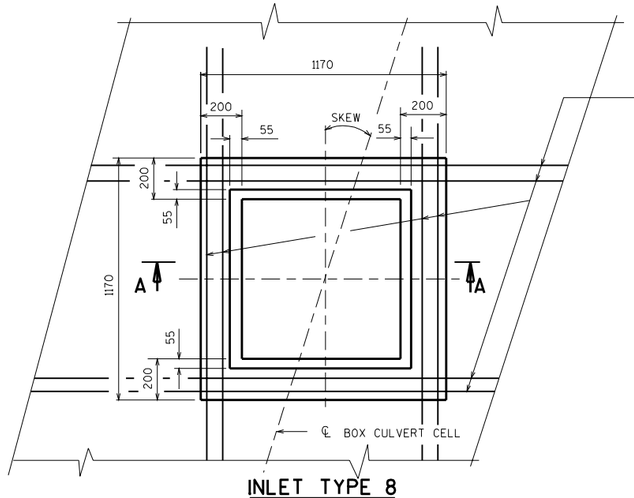

INLET TYPE 8

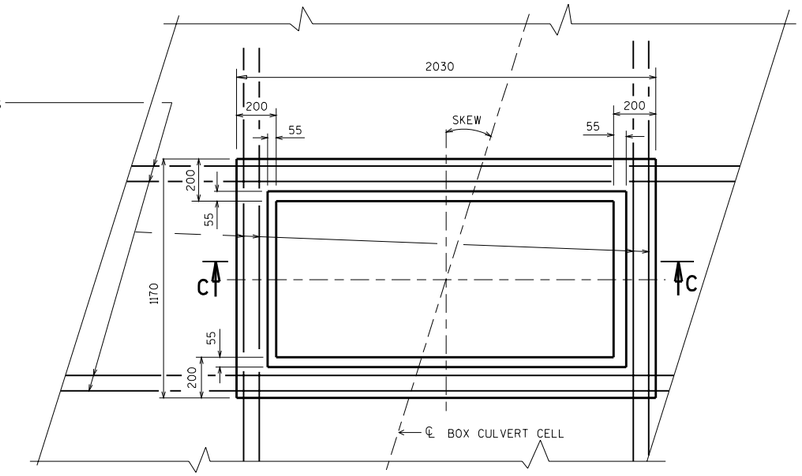

INLET TYPE 9

MEDIAN INLET PLAN

(INLET COVER NOT SHOWN)

GENERAL NOTES

FIELD CUT BAR STEEL REINFORCEMENT IN TOP SLAB TO CLEAR THE OPENING PROVIDED FOR MEDIAN INLET.

ADJUSTMENT OF THE COVER TO GRADE MAY BE ACCOMPLISHED BY THE USE OF MORTAR AND BRICK. MAXIMUM ADJUSTMENT SHALL BE 200 mm.

DESIGN NOTES

SIZE AND LENGTH OF "A" BARS TO BE DETERMINED BY THE DESIGNER.

STEEL SHOWN IS ADEQUATE TO DEPTHS UP TO 4720 mm FOR INLET TYPE 9 AND 13410 mm FOR INLET TYPE 8, ASSUMING EQUIVALENT FLUID PRESSURE OF 1.58 kPa.

VERTICAL STEEL ADEQUATE FOR DEPTH UP TO 7620 mm ASSUMING WIND LOAD OF 2.40 kPa.

ALL DIMENSIONS ARE IN MILLIMETERS.

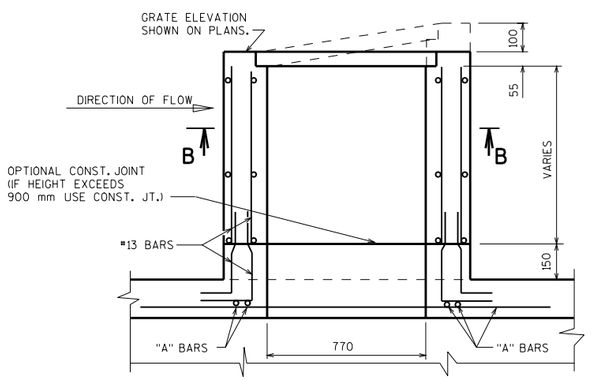

SECTION A-A

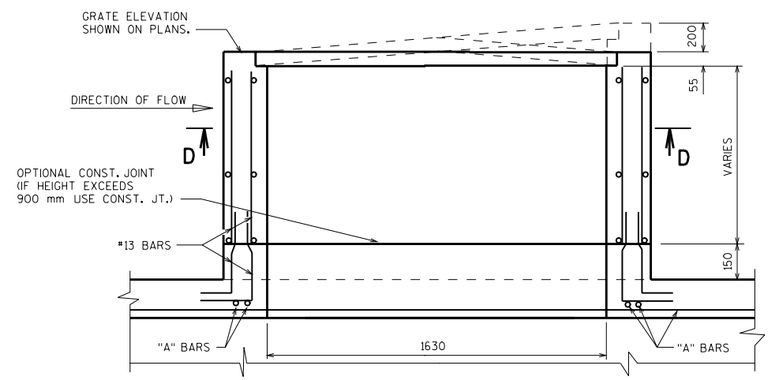

SECTION C-C

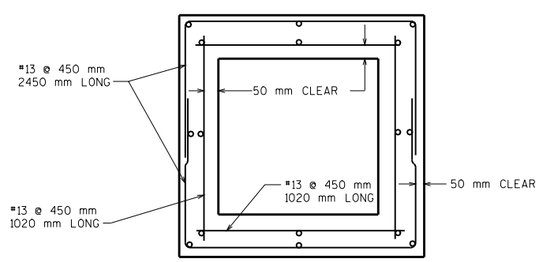

SECTION B-B

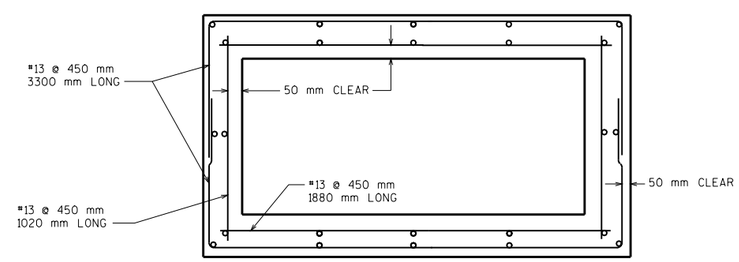

SECTION D-D

BOX CULVERT MANHOLE FOR INLET TYPE 8 & 9	
STATE OF WISCONSIN DEPARTMENT OF TRANSPORTATION STRUCTURES DEVELOPMENT SECTION	
APPROVED:	DATE: 1/99

METRIC STANDARD 36.4