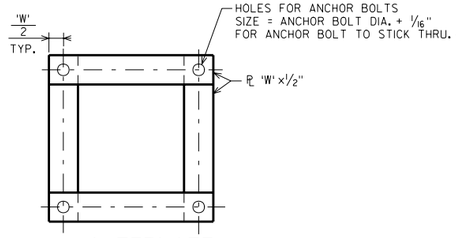

ALTERNATE ANCHOR PLATE/TEMPLATE PLAN

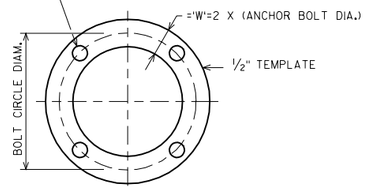

ANCHOR PLATE/TEMPLATE PLAN

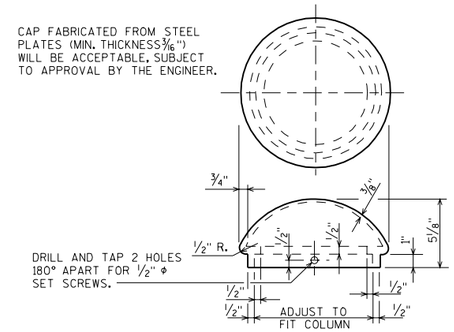

TOWER CAP DETAIL

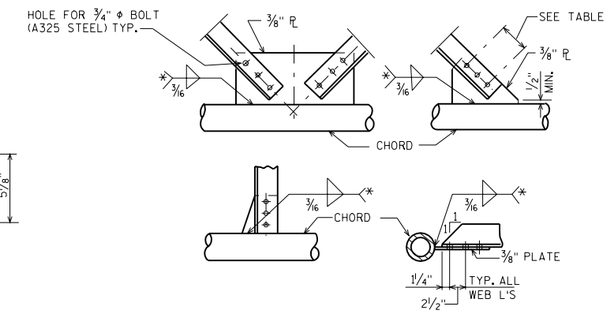

TYPICAL TRUSS CONNECTION DETAILS

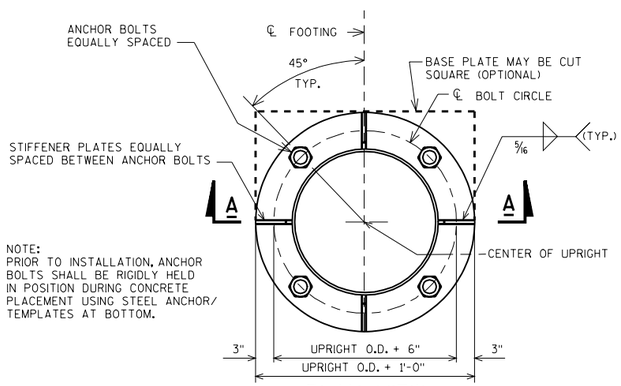

NOTE:
PRIOR TO INSTALLATION, ANCHOR BOLTS SHALL BE RIGIDLY HELD IN POSITION DURING CONCRETE PLACEMENT USING STEEL ANCHOR/TEMPLATES AT BOTTOM.

PLAN VIEW
(BASE PLATE)

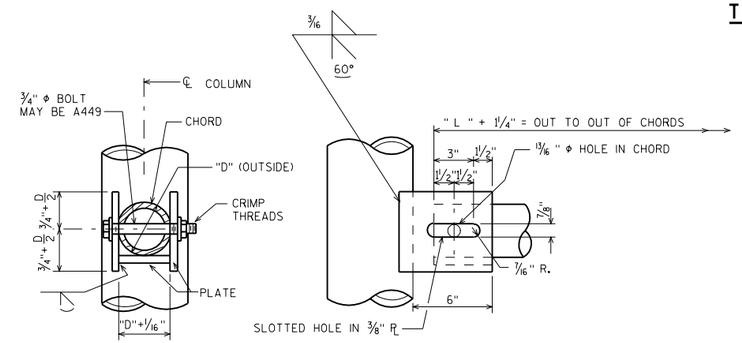

TOWER CONNECTION DETAIL

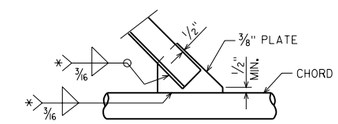

TYPICAL WELDED ALTERNATE

*ANGLE	WELD LENGTH	NO. OF BOLTS
2 1/2"x2 1/2"x1/4"	11"	3
3"x3"x3/16"	10"	3
3"x3"x1/4"	13"	4
3"x3"x5/16"	16 1/2"	5
3"x3"x3/8"	19 1/2"	6
4"x4"x1/4"	18"	5
4"x4"x5/16"	22"	6
4"x4"x3/8"	26"	8
4"x4"x7/16"	30"	9
4"x4"x1/2"	34"	10

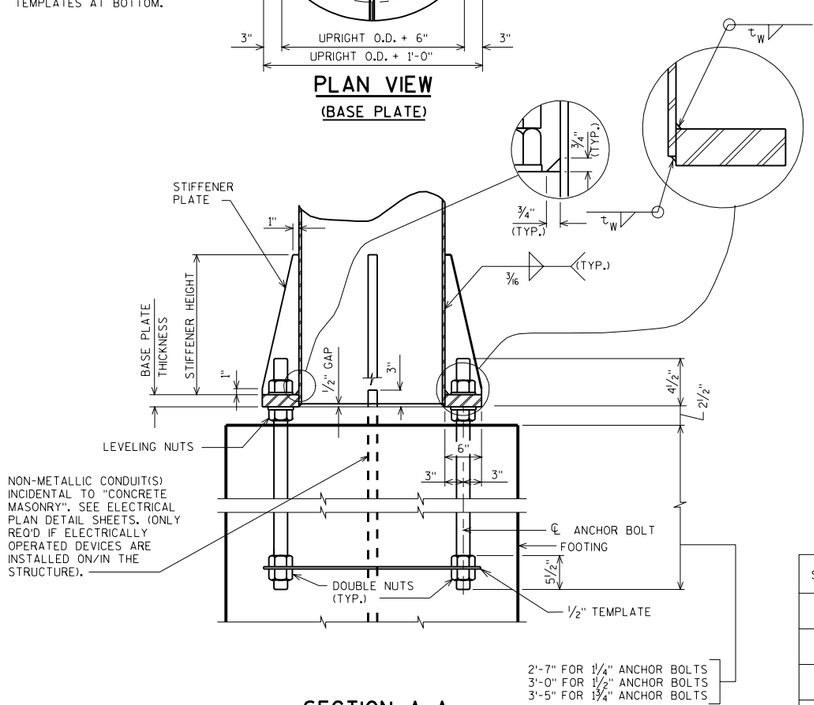

SECTION A-A

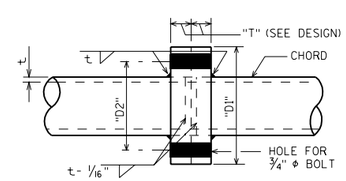

COUPLING DETAIL

BASE PLATE & UPRIGHT COLUMN DETAILS

STRUCTURE	COLUMN O.D. X THK.	ANCHOR BOLTS	BASE PLATE THICKNESS (IN.)	STIFFENER PLATE THICKNESS (IN.)	STIFFENER PLATE HEIGHT (IN.)	t_W (IN.)

TO BE DESIGNED

4-CHORD SIGN BRIDGE DETAILS

STATE OF WISCONSIN
DEPARTMENT OF TRANSPORTATION
STRUCTURES DEVELOPMENT SECTION

APPROVED: _____ DATE: 1/99