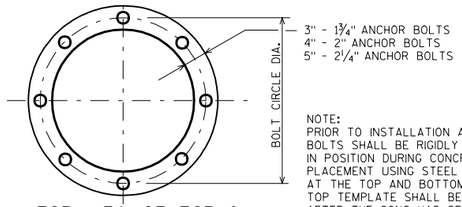

NOTE:
PRIOR TO INSTALLATION ANCHOR BOLTS SHALL BE RIGIDLY HELD IN POSITION DURING CONCRETE PLACEMENT USING STEEL TEMPLATES AT THE TOP AND BOTTOM. THE TOP TEMPLATE SHALL BE REMOVED AFTER THE CONC. HAS SET.

TOP VIEW OF TOP & BOTTOM TEMPLATES

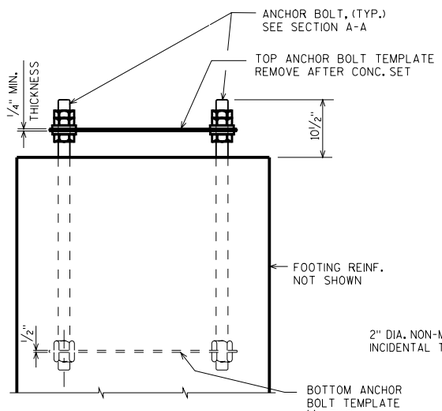

ELEVATION

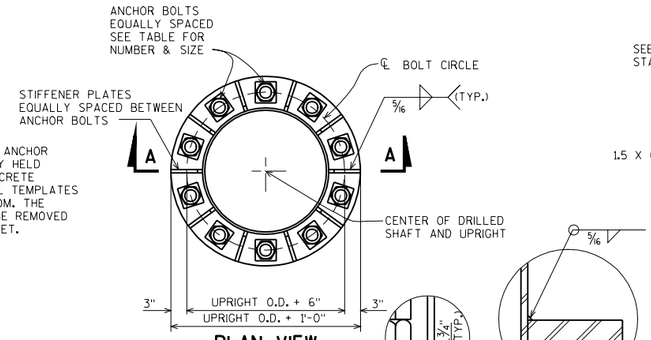

PLAN VIEW
(BASE PLATE)

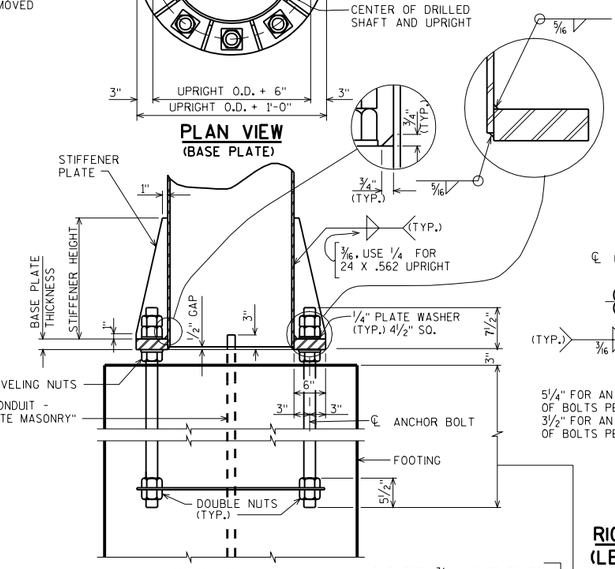

SECTION A-A

3'-5" FOR 1¾" ANCHOR BOLTS
3'-10" FOR 2" ANCHOR BOLTS
4'-3" FOR 2¼" ANCHOR BOLTS

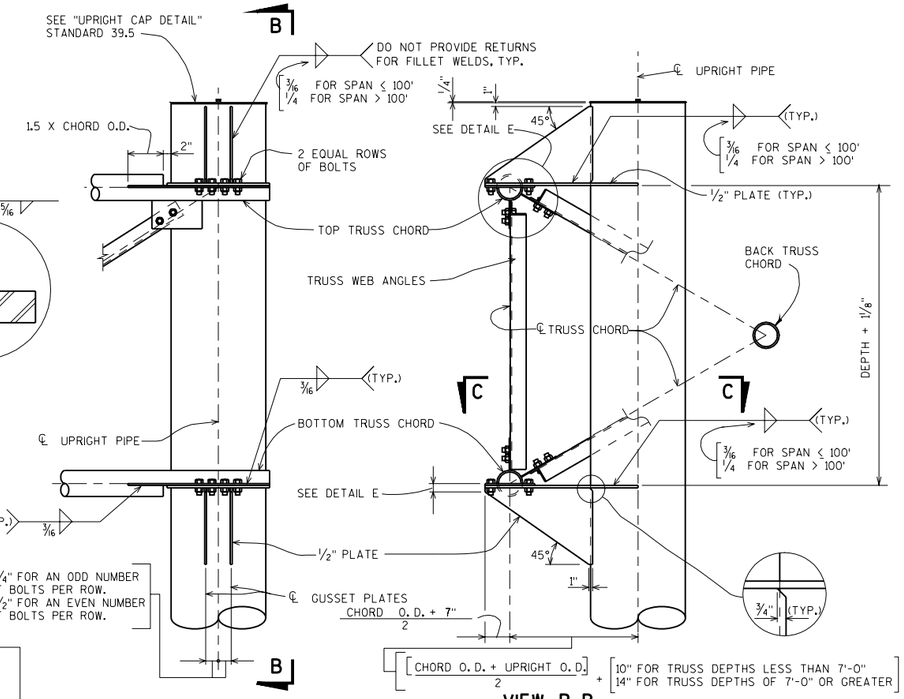

RIGHT UPRIGHT-TRUSS CONNECTION DETAIL
(LEFT UPRIGHT -TRUSS CONNECTION SIMILAR)

[WEB MEMBERS FROM BACK TRUSS CHORD OMITTED FOR CLARITY]

VIEW B-B

[CHORD O.D. + UPRIGHT O.D.] / 2 + [10" FOR TRUSS DEPTHS LESS THAN 7'-0" / 14" FOR TRUSS DEPTHS OF 7'-0" OR GREATER]

◪ SHOP DRILL HOLES IN PLATE WELDED TO BOTTOM CHORD.
FIELD DRILL HOLES IN BOTTOM PLATE WELDED TO UPRIGHT.
SHOP DRILL HOLES IN TOP PLATE WELDED TO UPRIGHT.
FIELD DRILL HOLES IN PLATE WELDED TO TOP CHORD.

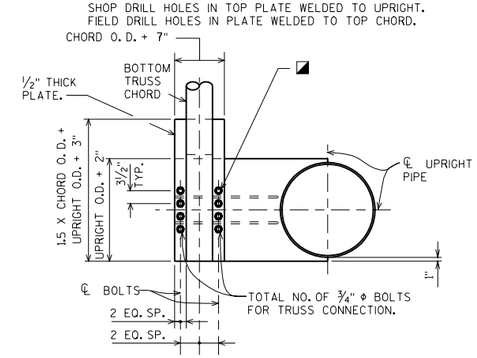

SECTION C-C
(WITH GUSSET PLATE AND ANGLES OMITTED FOR CLARITY)

* UPRIGHT SIZE	ANCHOR BOLTS	BASE PLATE THICKNESS	STIFFENER PLATE THICKNESS	STIFFENER PLATE HEIGHT

TO BE DESIGNED

*PIPE OUTSIDE DIAMETER IN INCHES X PIPE WALL THICKNESS IN INCHES

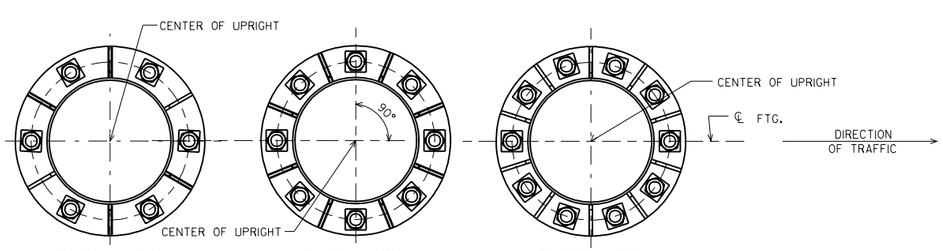

PLAN VIEW
(SHOWING 6 BOLTS)

PLAN VIEW
(SHOWING 8 BOLTS)

PLAN VIEW
(SHOWING 10 BOLTS)

BASE DESIGN

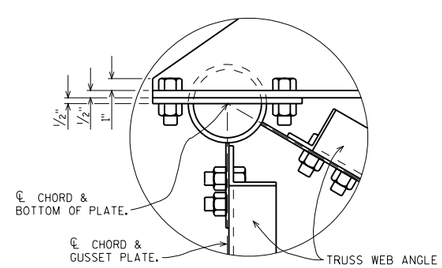

DETAIL E

NOTE: SEE 'TABLES OF DESIGN VARIABLES' FOR REFERENCED DIMENSIONS, SIZES AND QUANTITIES.

3-CHORD STEEL SIGN BRIDGE CONNECTION AND BASE DETAILS

STATE OF WISCONSIN
DEPARTMENT OF TRANSPORTATION
STRUCTURES DEVELOPMENT SECTION

APPROVED: _____ DATE: 1/99

STANDARD 39.6