Volume 1:

- General
- Air Brakes
- Combinatin
- Doubles/Triples
- Passenger Transport
- Tanker

Wisconsin Commercial Driver's Manual

August, 2004

Phone Numbers

General Information:

Milwaukee/Waukesha 414-266-1000

All other areas 800-924-3570

Oversize-Overweight ..... Nearest State Patrol District Office (see page 8)

Schedule Skills Test:

Statewide 888-368-9556

(except Madison & Milwaukee areas)

Madison Area 608-266-1442

Milwaukee Area 414-266-1028

Third Party Testers 800-242-2514

Federal Web Information

Federal Motor Carrier Safety Regulations, Rules and Notices ..... http://www.fmcsa.dot.gov/rulesregs/fmcsrhome.htm
FMCSA Forms ..... http://www.fmcsa.dot.gov/factsfigs/forms.htm
FMCSA Important Websites (FAQs for more Information) ..... http://www.fmcsa.dot.gov/factsfigs/postcardnu.htm
FMCSA Medical Advisory Criteria for Evaluation Under 49 CFR Part 391.41 ..... http://www.fmcsa.dot.gov/rulesregs/fmcsr/medical.htm
FMCSA Medical Reports ..... http://www.fmcsa.dot.gov/rulesregs/medreports.htm
FMCSA Motor Carrier and Driver Laws ..... http://www.fmcsa.dot.gov/rulesregs/fmcsr/laws.htm
FMCSA Motor Carrier Safety Programs ..... http://www.fmcsa.dot.gov/safetyprogs/saftprogs.htm
FMCSA Regulations: CDL Standards, Requirements and Penalties http://www.fmcsa.dot.gov/rulesregs/fmcsr/regs/383.htm
FMCSA Regulations: Driving of Commercial Motor Vehicles http://www.fmcsa.dot.gov/rulesregs/fmcsr/regs/392.htm
FMCSA Regulations: Qualifications of Drivers http://www.fmcsa.dot.gov/rulesregs/fmcsr/regs/391.htm
FMCSA Regulations: Revised HoursofService Regulations ..... http://www.fmcsa.dot.gov/Home_Files/revised_hos.asp
FMCSA Regulatory Guidance for the Federal Motor Carrier Safety Regulations ..... http://www.fmcsa.dot.gov/rulesregs/fmcsr/fmcsrguide.htm
Medical Exam Report Form ..... http://www.fmcsa.dot.gov/safetyprogs/spe_pdfs/Medical_Report.pdf
Office of Hazardous Materials Safety (HazMat Regulations and Interpretations) ..... http://www.myregs.com/dotrspa/

Wisconsin State Web Information

Change of Address ..... http://www.dot.wisconsin.gov/drivers/change.htm
CDL Medical Requirements ..... http://www.dot.wisconsin.gov/drivers/drivers/apply/types/cdlmedical.htm
CDL pre-trip and Road Tests ..... http://www.dot.wisconsin.gov/drivers/drivers/apply/types/thirdparty.htm
Commercial Drivers ..... http://www.dot.wisconsin.gov/drivers/drivers/apply/types/commercial.htm
Commercial Driving Schools List ..... http://www.dot.wisconsin.gov/drivers/drivers/gdl/cdschools.htm
Farm Service CDL Info and Study Guide http://www.dot.wisconsin.gov/drivers/docs/bds201.pdf
Hazardous Materials ..... http://www.dot.wisconsin.gov/drivers/drivers/apply/types/hazmat.htm
Motor Carriers and Trucking ..... http://www.dot.wisconsin.gov/business/carriers/index.htm
Motor Vehicle Laws ..... http://www.dot.wisconsin.gov/drivers/lawbook.htm
Oversize-Overweight ..... http://www.dot.wisconsin.gov/business/carriers/osow-permits.htm
School Bus or Alternative Vehicle Brochure http://www.dot.wisconsin.gov/drivers/docs/bds105.pdf
Schedule a Skills Test ..... http://www.dot.wisconsin.gov/drivers/drivers/schedule.htm
Third Party Testers http://www.dot.wisconsin.gov/drivers/docs/tp3.pdf
Transportation Administrative Rules ..... http://www.dot.wisconsin.gov/library/research/law/wisrules.htm

Table of Contents

VOLUME I

General Information:

Phone Numbers/Web Information ..... B
Warnings and Penalties 3
Definitions of Interstate/Intrastate Commerce 3
Guide for CMV and CDL (BDS207) 4
FAQ (BDS218) 5-6
How to Use this Manual 7
State Patrol District Map 8
CDL Disqualifications 9-10
Medical/Physical Requirements (BDS199) 11-12

PART ONE I

Section 1: Introduction 1-1
1.1 Commercial Driver License Tests 1-1
1.2 Other CDL Rules 1-2
1.3 Wisconsin CDL 1-2

Section 2: Drive Safely 2-1
2.1 Vehicle Inspection (more detail in Section 10) 2-1
2.2 Basic Control of Your Vehicle 2-7
2.3 Shifting Gears 2-9
2.4 Seeing 2-10
2.5 Communicating 2-11
2.6 Controlling Speed 2-13
2.7 Managing Space 2-15
2.8 Driving at Night 2-17
2.9 Driving in Fog 2-19
2.10 Driving in Winter 2-19
2.11 Driving in Very Hot Weather 2-20
2.12 Railroad Crossings 2-21
2.13 Mountain Driving 2-21
2.14 Seeing Hazards 2-22
2.15 Emergencies 2-25
2.16 Skid Control and Recovery 2-27
2.17 Accident Procedures 2-28
2.18 Fires 2-28
2.19 Staying Alert and Fit to Drive 2-29
2.20 Materials Hazardous Rules for All Commercial Drivers 2-31

Section 3: Transporting Cargo Safely 3-1
3.1 Inspecting Cargo 3-1
3.2 Weight and Balance 3.1
3.3 Securing Cargo 3.2
3.4 Other Cargo Needing Special Attention 3.3

PART TWO II

Section 4: Transporting Passengers 1-1
4.1 Pre-trip Inspection 4-1
4.2 Loading and Trip Start 4-1
4.3 On the Road 4-3
4.4 After-Trip Vehicle Inspection 4-3
4.5 Prohibited Practices 4-3
4.6 Use of Brake-Door Interlocks 4-4

Section 5: Air Brakes 5-1
5.1 Pre-trip Inspection 5-1
5.2 Dual Air Brake 5-4
5.3 Inspecting Air Brake Systems 5-4
5.4 Using Air Brake 5-5

Section 6: Combination Vehicles 6-1
6.1 Driving Conbination Vehicles Safely 6-1
6.2 Conbination Vehicle Air Brakes 6-3
6.3 Coupling and Uncoupling 6-5
6.4 Inspecting a Combination Vehicle 6-7

Section 7: Doubles and Triples 7-1
7.1 Pulling Double/Triple Trailers 7-1
7.2 Coupling and Uncoupling 7-1
7.3 Inspecting Doubles and Triples 7-3
7.4 Doubles/Triples Air Brake Check 7-4

Section 8: Tank Vehicles 8-1
8.1 Inspecting Tank Vehicles 8-1
8.2 Driving Tank Vehicles 8-1
8.3 Safe Driving Rules 8-2

Section 9: Hazardous Materials ***Note: See Volume II for (Section 9)***
9.1 The Intent of the Regulations
9.2 Hazardous Materials Transportation - Who Does What
9.3 Communication Rules
9.4 Loading and Unloading
9.5 Bulk Packaging Marking, Loading and Unloading
9.6 Hazardous Materials - Driving and Parking Rules
9.7 Hazardous Materials - Emergencies

Table A Radioactive Separation Table
Table B Table of Hazard Class Definitions
Glossary

PART THREE ..... **III**

Section 10: Pre-Trip Inspection Test **10-1**
10.1 All Vehicles 10-1
10.2 External Inspection (Passenger Bus/Truck/Tractor) 10-3
10.3 *School Bus Only* **Note: See Volume II for (10.3)**
10.4 Trailer 10-6
10.5 Coach/Transit Bus 10-6

Vehicle Inspection Memory Aids **10-9**
Passenger Bus 10-9
Straight Truck 10-11
Combination Vehicles 10-13

Section 11: Basic Vehicle Control Skills Test **11-1**
11.1 Scoring 11-1
11.2 Exercises 11-1

Section 12: On Road Driving Test **12-1**
CDL Skills Test Guide 12-1

Other Information C

WARNING

If you drive a vehicle over 10,000 lbs. in interstate commerce, you may be subject to Federal Motor Carrier safety regulations.

Contact a State Patrol office for details (see page 8).

Penalty For Operating Without a CDL (for Drivers):

1st Offense - $200-$600 fine **OR** not more than 6 months in jail; 3 points

2nd within 3 years - $300-$1,000 fine **OR** 5 days to 6 months in jail; 3 points

3rd or more within 3 years - $1,000-$2,000 fine **AND** 10 days to 6 months in jail; 3 points

Penalty For Operating Without a CDL (for Employers):

The penalty for employers who place unqualified drivers on the road is a $2,500-$10,000 fine **OR** not more than 90 days in jail; **OR** both.

INTERSTATE COMMERCE:

Any trade, traffic or transportation in the U.S. between a place **in** a State and a place **outside** of such State **OR** is between two places in a State **through** another State or a place outside of the U.S. Special note: Transportation with a CMV within state lines is considered interstate commerce if the origin and/or destination of the load crosses state lines.

INTRASTATE COMMERCE:

Any trade, traffic or transportation in any State which is not described in the term “interstate” commerce.

WISCONSIN’S IMPLIED CONSENT LAW:

If a police or traffic officer asks you to take an Alcohol Concentration test, you must do so. If you refuse to take it, you will lose your driver license for one year.

NEW DRIVERS:

To drive in **intrastate or interstate commerce**, you must have passed a medical examination, within the past two years, in accordance with Federal Motor Carrier Safety Regulations 49 CFR 391, Subpart E. A **summary of medical physical qualifications** for drivers and a Medical Examiner’s Certificate (form BDS 199) is available in this manual on page 7, on the Internet at **http://www.dot.wisconsin.gov/drivers/forms/bds199.pdf**, or at your local DMV Service Center.

CMV and CDL Guide

(Examples)

1. A combination vehicle 26,001 or more pounds is a Class "A" CMV only if the trailer being towed has a gross vehicle weight rating, registered weight or actual gross weight of more than 10,000 pounds.

2. When the weight of the combination vehicle is exactly 26,000 pounds, it is not a CMV and does not require a CDL. Example: A tractor weighs 16,000 pounds and the towed unit weighs 10,000 pounds.

3. When the towing vehicle is 26,000 or less pounds and the towed unit is 10,000 or less pounds, it is not a CMV and does not require a CDL. Example: A tractor weighs 25,500 pounds and the towed unit weighs 8,000 pounds.

4. A CDL with an "N" tank vehicle endorsement is required only when the capacity of the tank is 1,000 gallons or more and the vehicle fits the description of a CMV.

5. A CDL with a "P" passenger endorsement is required when the vehicle is designed to transport or is actually transporting the driver and 15 or more passengers.

	Vehicle Examples					License Requirements			
	Tractor or Single Unit Truck	**Trailer**	**Carries HazMat**	**Is designed to transport 16 or more passengers including the driver**	**Is a School Bus**	**Is this a CMV?**	**Do I need a CDL?**	**What Class is it?**	**Which Endorsement?**
1	18,000#	12,000#	X			Yes	Yes	A	H
2	8,000#	20,000#				Yes	Yes	A	
3	26,500#					Yes	Yes	B	
4	27,000#	10,000#				Yes	Yes	B	
5	27,000#			X	X	Yes	Yes	B	P and S
6	29,000#			X		Yes	Yes	B	P
7	12,000#		X			Yes	Yes	C	H
8	25,000#			X		Yes	Yes	C	P
9	25,000#			X	X	Yes	Yes	C	P and S
10	5,000#		X			Yes	Yes	C	H
11	16,000#	10,000#				No	No	D	
12	26,000#	8,000#				No	No	D	
13	20,000#	8,000#				No	No	D	
14	10,000#				X	No	No	D	S
15	6,000#	20,000#				No	No	D	
	Tank Truck								
16	26,000#					No	No	D	
17	26,010#					Yes	Yes	B	N
18	26,000#	10,000#				No	No	D	
19	26,000#	10,000#	X			Yes	Yes	C	H - N
20	20,000#	10,500#				Yes	Yes	A	N

BDS207 2/2000

WisDOT
Bureau of Driver Services
P.O. Box 7920
Madison, WI 53707-7920
(608) 266-2237

Effective July 29, 1996: Drivers of commercial motor vehicles (CMV) operating in ***intrastate commerce*** must meet the federal medical standards and present a valid federal medical card when they apply for a commercial driver license (CDL) unless they have been grandfathered or are exempt by federal or state law.

What is Interstate Commerce? Any trade, traffic, or transportation in the U.S. which is between a place in a State and a place outside of such State, or is between two places in a State through another State, or a place outside of the U.S. **Note**: Transportation with a CMV within state lines is considered interstate commerce if the origin and/or destination of the load crosses state lines.

What is Intrastate Commerce? Any trade, traffic, or transportation in any State which is not described in the term "interstate commerce."

Is there a simple definition of commerce? Everyone in a CMV is considered to be in commerce unless they are exempt (driving for a political subdivision or driving a school bus).

Who was grandfathered? Drivers who had a Wisconsin CDL prior to July 29, 1996. However, those drivers will lose their grandfathered status if their CDL is revoked on or after July 29, 1996.

What are the benefits of being grandfathered? Grandfathered drivers are not required to have a federal medical exam or meet federal medical standards to qualify for a CDL which allows driving in intrastate commerce. Grandfathered drivers must still meet the state CDL medical standards such as visual acuity of 20/60 in the best eye. However, if they don't meet the state medical standards, drivers are allowed to appeal to the Medical Review Board.

Can grandfathered status be transferred from one state to another? No.

Do CMV Drivers employed by a political subdivision need a federal medical card? No. Drivers employed by any political subdivision (federal, state, county, city, township or village) operating a CMV owned by the political subdivision are exempt from the federal standards.

Do school bus drivers employed by a school district or private contractor need the federal medical card? Drivers employed by a school district and driving a bus owned by the district are exempt from the federal standards. They may cross state lines to transport students between home and school or when driving for curricular or extracurricular activities and charter trips.

Drivers employed by a private contractor and driving a bus owned by the contractor are exempt from the federal standards while operating within Wisconsin and when crossing state lines to transport students between home and school. A valid federal medical card is required when operating across state lines for curricular or extracurricular activities and charter trips.

Are CMV drivers operating a passenger bus exempt from federal medical standards? No. Drivers needing a "P" endorsement who do not have the federal medical card and are not grandfathered will be issued a license with two restrictions ("No CMV Operation in Interstate Commerce" and "No CMV Operation in Intrastate Commerce unless Exempt by State or Federal Law").

For drivers needing a "P" endorsement, such as those driving buses owned by a municipality (which is exempt), having both restrictions is fine. For those driving buses for a private human service agency (which is not exempt), "No CMV Operation in Interstate Commerce" and "No CMV Operation in

Intrastate Commerce" restrictions will not be acceptable and they will need to present the federal medical card, unless grandfathered, to avoid these restrictions. Drivers must know the type of operation involved to determine if they need a federal medical card.

Can drivers with an instruction permit (CDLI) with a "P" endorsement, practice operating a school bus without a federal medical card? Yes, they may practice in the school bus when accompanied by a qualified instructor or a properly licensed person 21 years of age or older who holds a valid license authorizing passenger vehicle operation. However, they may not transport passengers.

Can drivers with a commercial instruction permit (CDLI) practice operating a truck without a federal medical card? No, if the vehicle is owned by a commercial driving school or an employer who is not a political subdivision.

Yes, if the vehicle is owned by a Wisconsin Technical College or an employer who is a political subdivision.

What happens to drivers who don't pass a vision test, yet have a federal medical card? They will be referred to a vision or other appropriate medical specialist. If issuance continues, the license will have the "No CMV Operation in Interstate Commerce" restriction and, if the driver is not grandfathered, the "No CMV Operation in Intrastate Commerce" restriction.

What type of driving can drivers perform if they were not grandfathered and do not have a federal medical card? They can drive for exempt groups (political subdivision or school districts, if they meet the Wisconsin school bus driver standards or are approved by the Medical Review Board).

Do Drivers age 18, 19, and 20 need a federal medical card? Yes, if they wish to operate a CMV in intrastate commerce and have not been grandfathered or are not exempt by federal or state law. If they present a federal medical card their CDL will be issued with the "No CMV Operation in Interstate Commerce" restriction because federal law does not permit a person under age 21 to operate a CMV in interstate commerce.

Who can appeal to the Medical Review Board? Drivers who are grandfathered may appeal to the board for intrastate driving. Also, new drivers who plan to drive for the exempt groups (political subdivision or school districts) may also appeal to the board. The board cannot make any exceptions to the federal standards. Any person who is required to have a federal medical card may not appeal to the board.

If not grandfathered, can a person with insulin dependent diabetes get a CDL for intrastate driving? Yes, if they file with the DMV Medical Review Unit, two satisfactory medical reports from two physicians. They will be issued a CDL with restrictions, "No CMV Operation in Interstate Commerce" and "No CMV Operation in Intrastate Commerce Unless Exempt by State or Federal Law". They will also get a letter to carry, while operating a CMV, that states they have qualified for this exemption.

Other Questions? Call 608-266-2327 or 608-266-0428.

How to Use This Manual

(This page includes both Volume I and II section information)

If you want to get a license to drive this type of vehicle or a similar tank vehicle	Study these sections of the driver's manual
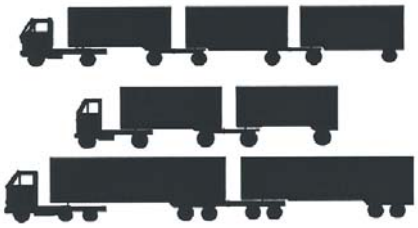	Section 1: Introduction Section 2: Driving Safely Section 3: Cargo Section 5: Air Brakes Section 6: Combination Vehicles Section 7: Doubles & Triples Section 9: Haz Mat (if needed) In Volume 2
	Section 1: Introduction Section 2: Driving Safely Section 3: Cargo Section 5: Air Brakes Section 6: Combination Vehicles Section 9: Haz Mat (if needed) In Volume 2
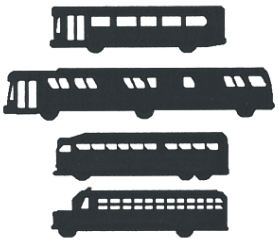	Section 1: Introduction Section 2: Driving Safely Section 3: Cargo Section 4: Passengers Section 5: Air Brakes (if needed) **Note:** School Bus information is found in Volume 2
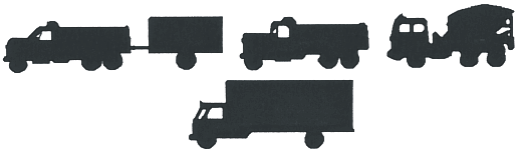	Section 1: Introduction Section 2: Driving Safely Section 3: Cargo Section 5: Air Brakes Section 6: Combination Vehicles (If needed) Section 9: Haz Mat (if needed) In Volume 2
(CDL required only if these vehicles are used to haul hazardous materials) 	Section 1: Introduction Section 2: Driving Safely Section 3: Cargo Section 9: Haz Mat (if needed) In Volume 2

If you want a tank vehicle endorsement, also study Section 8.

WISCONSIN DIVISION OF STATE PATROL DISTRICT MAP

Bureau of Transportation Safety (BOTS)

Major Dan Lonsdorf
4802 Sheboygan Avenue, Rm. 951
Hill Farms State Trans. Bldg.
P.O. Box 7936
Madison, WI 53707-7936
608/266-0402

DISTRICT 7 D7

Captain Lee F. McMenamin
Lieutenant Nicholas R. Wanink
W7102 Green Valley Road
Spooner, WI 54801
715/635-2141
Fax 715/635-6373

DISTRICT 4 D4

Captain Jeffrey J. Frenette
Lieutenant Timothy L. Carnahan
2805 Martin Avenue
(Junction Hwys. 51 & NN)
P.O. Box 5157
Wausau, WI 54401-5157
715/845-1143
Fax 715/848-9255

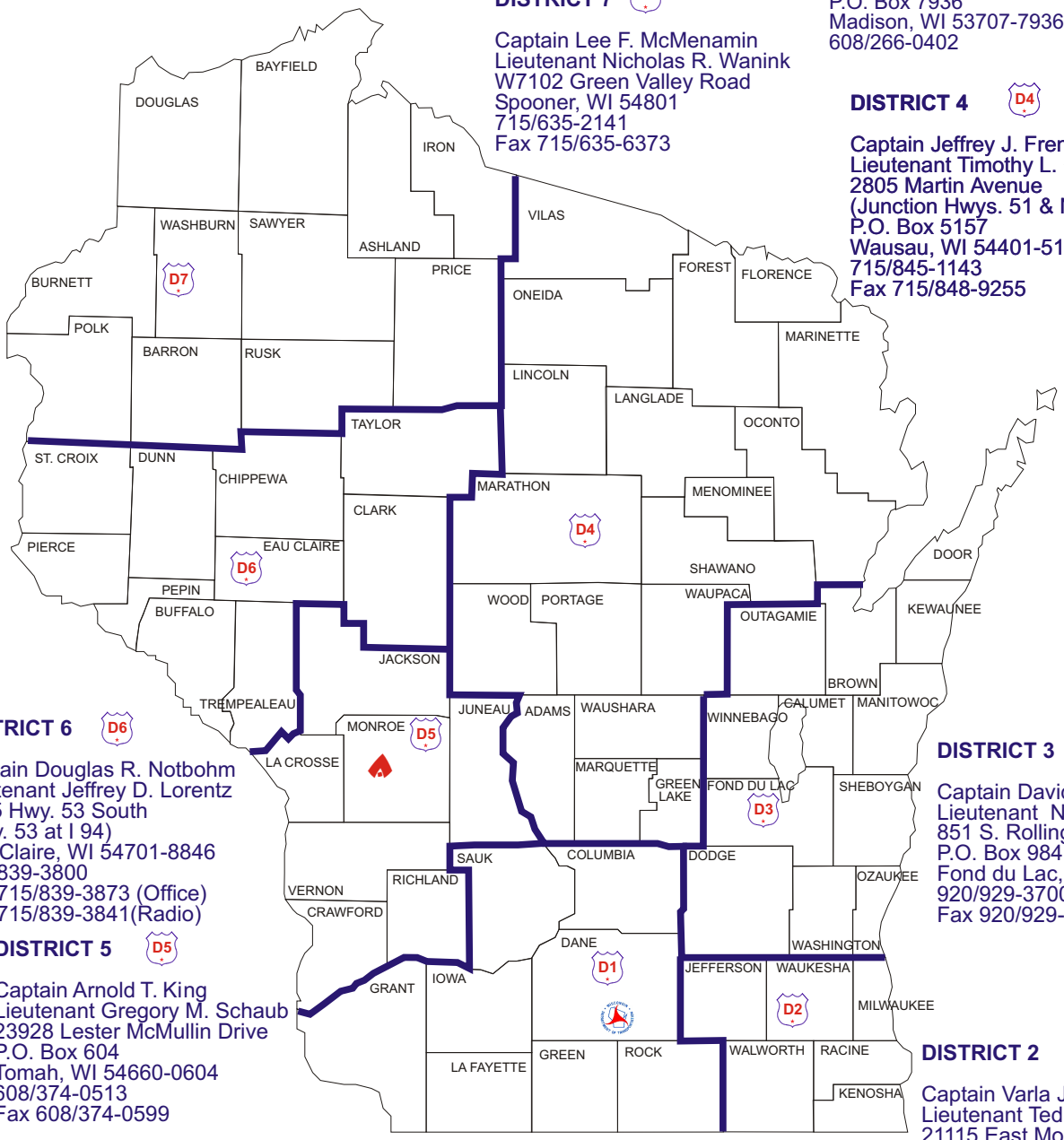

DISTRICT 6 D6

Captain Douglas R. Notbohm
Lieutenant Jeffrey D. Lorentz
5005 Hwy. 53 South
(Hwy. 53 at I 94)
Eau Claire, WI 54701-8846
715/839-3800
Fax 715/839-3873 (Office)
Fax 715/839-3841(Radio)

DISTRICT 3 D3

Captain David J. Pichette
Lieutenant Nick Scorcio
851 S. Rolling Meadows Drive
P.O. Box 984
Fond du Lac, WI 54936-0984
920/929-3700
Fax 920/929-7666

DISTRICT 5 D5

Captain Arnold T. King
Lieutenant Gregory M. Schaub
23928 Lester McMullin Drive
P.O. Box 604
Tomah, WI 54660-0604
608/374-0513
Fax 608/374-0599

DISTRICT 2 D2

Captain Varla J. Bishop
Lieutenant Ted J. Meagher
21115 East Moreland Blvd.
Waukesha, WI 53186-2985
262/785-4700
Fax 262/785-4723

WISCONSIN STATE PATROL ACADEMY

Major Darren C. Price
Lieutenant RoxAnn L. King
95 South 10th Avenue
Ft. McCoy, WI 54656
608/269-2500
Fax 608/269-5681

DIVISION HEADQUARTERS

Superintendent David L. Collins
4802 Sheboygan Avenue, Rm. 551
Hill Farms State Trans. Bldg.
P.O. Box 7912
Madison, WI 53707-7912
608/266-3212
Fax 608/267-4495

DISTRICT 1 D1

Captain David C. Heinle
W. North Street
P.O. Box 610
DeForest, WI 53532-0610
60911 8/846-8500
Fax 608/846-8536 (Office)
Fax 608/846-8523 (Radio)

4/21/2004

Wisconsin CDL Disqualifications

Disqualifying Offenses: Violations on or after 7/1/87 but prior to 9/30/2005	Disqualify CDL 1st CMV Conviction	Disqualify CDL 1st non-CMV Conviction	Disqualify CDL 2nd CMV Conviction	Disqualify CDL 2nd non-CMV Conviction	CDL OCC	Revoke Class D/M	Class D/M OCC (Wait)
Operating While Intoxicated (OWI)					No	6 mos-3 yr	Up to 90 days
OWI Causing Injury					No	1-2 years	60 days
OWI Causing Great Bodily Harm	1 Year				No	2 years	120 days
OWI Causing Death	or, if				No	5 years	120 days
Commercial Alcohol (CA) .04-.07	HAZ MAT				No	N/A	N/A
Commercial Alcohol Causing Injury	Conviction:	N/A	Life	N/A	No	N/A	N/A
CA Causing Great Bodily Harm	3 Years				No	N/A	N/A
CA Causing Death					No	N/A	N/A
Op. Under Influence of Controlled Substance					No	6 mos-3 yr	Up to 90 days
Refusal					No	1-3 years	30 - 120 days
Failure to Stop/Report Accident					No	0-5 years	15 days
Felony					No	1 year	15 days
Controlled Substance Felony	Life				No	N/A	N/A

Disqualifying Offenses: Violations on or after 9/30/2005	Disqualify CDL 1st CMV Conviction	Disqualify CDL 1st non-CMV Conviction	Disqualify CDL 2nd CMV Conviction	Disqualify CDL 2nd non-CMV Conviction	CDL OCC	Revoke Class D/M	Class D/M OCC (Wait)
Operating While Intoxicated (OWI)		1 Year		Life	No	6 mos-3 yr	Up to 90 days
OWI Causing Injury		1 Year		Life	No	1-2 years	60 days
OWI Causing Great Bodily Harm	1 Year	1 Year		Life	No	2 years	120 days
OWI Causing Death	or, if	1 Year		Life	No	5 years	120 days
Commercial Alcohol (CA) .04-.07	HAZ MAT	N/A		N/A	No	N/A	N/A
Commercial Alcohol Causing Injury	Conviction:	N/A		N/A	No	N/A	N/A
CA Causing Great Bodily Harm	3 Years	N/A		N/A	No	N/A	N/A
CA Causing Death		N/A	Life	N/A	No	N/A	N/A
Operating Under Influence of Controlled Subst		1 Year		Life	No	6 mos-3 yr	Up to 90 days
Refusal		1 Year		Life	No	1-3 years	30 -120 days
Failure to Stop/Report Accident		1 Year		Life	No	0-5 years	15 days
Felony		1 Year		Life	No	1 year	15 days
Driving a CMV when CDL is rev/sus/can/dqf		N/A		N/A	No	N/A	N/A
Causing a fatality/negligent operation of CMV		N/A		N/A	No	N/A	N/A
Controlled Substance Felony	Life	Life		Life	No	N/A	N/A

Serious Disqualifying Offenses: Violations on or after 7/1/87 but prior to 9/30/2005	Disqualify CDL 1st CMV Conviction	Disqualify CDL 1st non-CMV Conviction	Disqualify CDL 2nd CMV Conviction	Disqualify CDL 2nd non-CMV Conviction	CDL OCC	Rev/Sus Class D/M	Class D/M OCC (Wait)
Speeding 15 or more over the limit			2 offenses		No		
Reckless Driving			within 3 years:		No		
Passing Illegally	N/A	N/A	60 days	N/A	No	N/A	N/A
Improper or Erratic Lane Change			3 offenses		No		
Following to Closely			within 3 years:		No		
Moving violation arising from a fatal accident			120 days		No		

Serious Disqualifying Offenses: Violations on or after 9/30/2005	Disqualify CDL 1st CMV Conviction	Disqualify CDL 1st non-CMV Conviction	Disqualify CDL 2nd CMV Conviction	Disqualify CDL 2nd non-CMV Conviction	CDL OCC	Rev/Sus Class D/M	Class D/M OCC (Wait)
Speeding 15 or more over the limit		2 offenses		2 offenses	No		
Reckless Driving		within 3 years:	2 offenses	within 3 years:	No		
Passing Illegally		60 days	within 3 years:	60 days	No		
Improper or Erratic Lane Change		3 offenses	60 days	3 offenses	No		
Following to Closely	N/A	within 3 years:		within 3 years:	No	N/A	N/A
Moving violation arising from a fatal accident		120 days	3 offenses	120 days	No		
Driving a CMV without obtaining a CDL		IF the conviction	within 3 years:	IF the conviction	No		
Driving a CMV without a CDL in possession		results in rev/sus	120 days	results in rev/sus	No		
Driving a CMV without proper class/endorsement		or cancel of CDL		or cancel of CDL	No		
		holder's license or		holder's license or			
		non-CMV driving		non-CMV driving			
		privileges		privileges			

Railroad-Highway Grade Crossing: Violations on or after 10/4/2002 Driver fails to:	Disqualify CDL 1st CMV Conviction	Disqualify CDL 1st non-CMV Conviction	Disqualify CDL 2nd CMV Conviction	Disqualify CDL 2nd non-CMV Conviction	CDL OCC	Rev/Sus Class D/M	Class D/M OCC (Wait)
Slow down to ensure tracks clear					No		
Stop if the tracks are not clear			2nd offense within		No		
Stop before driving onto crossing	1st offense: 60 days	N/A	3 years: 120 days	N/A	No	N/A	N/A
Drive through crossing without stopping					No		
Obey a traffic control device or officer			3rd offense within		No		
Ensure sufficient undercarriage clearance			3 years: 1 year		No		

Falsified application for a CMV: Violations on or after 12/21/1995	Disqualify CDL 1st CMV Conviction	Disqualify CDL 1st non-CMV Conviction	Disqualify CDL 2nd CMV Conviction	Disqualify CDL 2nd non-CMV Conviction	CDL OCC	Rev/Sus Class D/M	Class D/M OCC (Wait)
Falsified application for a CMV	60 days	N/A	60 days	N/A	No	1 year	15 days

Operating CMV while Out-of-Service: Violations on or after 8/1/2000	Disqualify CDL 1st CMV Conviction	Disqualify CDL 1st non-CMV Conviction	Disqualify CDL 2nd CMV Conviction	Disqualify CDL 2nd non-CMV Conviction	CDL OCC	Rev/Sus Class D/M	Class D/M OCC (Wait)
Operating CMV while Out-of-Service			2nd offense within		No		
	1st offense: 90 days		10 years: 1 year				
HAZ penalties apply if violation occurred while		N/A	HAZ: 3 years	N/A	No	N/A	N/A
transporting HAZ MAT or while operating a vehicle designed to carry 16 or more passengers	HAZ: 180 days		3rd offense within				
			10 years: 3 years				
			HAZ: 3 years				

Medical/Physical Requirements

BDS199 4/2003 Wisconsin Department of Transportation

To drive in **intrastate or interstate commerce,** you must have passed a medical examination, within the past 2 years, in accordance with Federal Motor Carrier Safety Regulations 49 CFR 391, Subpart E. A **summary of medical and physical qualifications** for drivers is found on the back of this sheet. A waiver of certain physical defects may be available. See **www.fmcsa.dot.gov/rulesregs/medreports.htm.**

For more information on medical requirements, contact USDOT Office of Motor Carriers, 567 D'Onofrio Drive, Madison, WI 53719, phone (608) 829-7530 or on the Internet go to www.fmcsa.dot.gov/factsfigs/eta/391.html.

Acceptable proof of examination is a Medical Examination Certificate completed by a Medical Examiner. A Medical Examiner is a person who is licensed, certified, and/or registered, in accordance with applicable State laws and regulations, to perform physical examinations. The term includes, but is not limited to, doctors of medicine, doctors of osteopathy, physician assistants, advanced practice nurses, registered nurses and doctors of chiropractic.

MEDICAL EXAMINER'S CERTIFICATE

I certify that I have examined _____
(Driver's name --- (Print))

in accordance with the Federal Motor Carrier Safety Regulations (49 CFR 391.41-391.49) and with knowledge of the driving duties, I find this person is qualified; and, if applicable, only when:

- ☐ wearing corrective lenses
- ☐ wearing hearing aid
- ☐ accompanied by a _____ waiver/exemption
- ☐ driving within an exempt intracity zone (49 CFR 391.62)
- ☐ accompanied by a Skill Performance Evaluation Certificate (SPE)
- ☐ qualified by operation of 49 CFR 391.64

The information I have provided regarding this physical examination is true and complete. A complete examination form with any attachment embodies my findings completely and correctly, and is on file in my office.

SIGNATURE OF MEDICAL EXAMINER	MEDICAL EXAMINER TELEPHONE	DATE OF EXAM
MEDICAL EXAMINER'S NAME (PRINT)	☐ MD ☐ DO ☐ Chiropractor ☐ Physician Assistant ☐ Advanced Practice Nurse ☐ RN	
MEDICAL EXAMINER'S LICENSE OR CERTIFICATE NO. / ISSUING STATE		
SIGNATURE OF DRIVER	DRIVER'S LICENSE NO.	STATE
ADDRESS OF DRIVER		
EXPIRATION DATE OF THIS MEDICAL CERTIFICATE		

For more information on school bus "S" and passenger "P" endorsement medical requirements, contact WIDOT Medical Review Unit, Room 351, 4802 Sheboygan Ave., Madison, WI 53705, phone (608) 266-2327.

School Bus "S" Only:

As a service, the following form is offered to aid "S" endorsement holders in complying with Wisconsin medical requirements:

FOR EMPLOYER FILES:

In Wisconsin, all drivers with school bus (S) endorsement must be free from tuberculosis in a communicable form as determined by a tuberculin test and/or chest X-Ray.

Name of Driver: _____

Tuberculin test date: _____ Results: _____

If chest X-Ray, give date and result: _____

Signature of medical examiner: _____

49 CFR 391.41 Subpart E - Physical Qualifications and Examinations:

(a) A person shall not drive a commercial motor vehicle unless he/she is physically qualified to do so and, except as provided in 391.67, **has on his/her person the original, or a photographic** copy, of a medical examiner's certificate that he/she is physically qualified to drive a commercial motor vehicle.

(b) A person is physically qualified to drive a commercial motor vehicle if that person -

(1) Has no loss of a foot, a leg, a hand, or an arm, or has been granted a waiver pursuant to 391.49;

(2) Has no impairment of:

(i) A hand or finger which interferes with prehension or power grasping; or

(ii) An arm, foot, or leg which interferes with the ability to perform normal tasks associated with operating a commercial motor vehicle; or any other significant limb defect or limitation which interferes with the ability to perform normal tasks associated with operating a commercial motor vehicle; or has been granted a waiver pursuant to 391.49.

(3) Has no established medical history or clinical diagnosis of diabetes mellitus currently requiring insulin for control;

(4) Has no current clinical diagnosis of myocardial infarction, angina pectoris, coronary insufficiency, thrombosis, or any other cardiovascular disease of a variety known to be accompanied by syncope, dyspnea, collapse, or congestive cardiac failure;

(5) Has no established medical history or clinical diagnosis of a respiratory dysfunction likely to interfere with his/her ability to control and drive a commercial motor vehicle safely;

(6) Has no current clinical diagnosis of high blood pressure likely to interfere with his/her ability to operate a commercial motor vehicle safely;

(7) Has no established medical history or clinical diagnosis of rheumatic, arthritic, orthopedic, muscular, neuromuscular, or vascular disease which interferes with his/her ability to control and operate a commercial motor vehicle safely;

(8) Has no established medical history or clinical diagnosis of epilepsy or any other condition which is likely to cause loss of consciousness or any loss of ability to control a commercial motor vehicle;

(9) Has no mental, nervous, organic, or functional disease or psychiatric disorder likely to interfere with his/her ability to drive a commercial motor vehicle safely;

(10) Has distant visual acuity of at least 20/40 (Snellen) in each eye without corrective lenses or visual acuity separately corrected to 20/40 (Snellen) or better with corrective lenses, distant binocular acuity of at least 20/40 (Snellen) in both eyes with or without corrective lenses, field of vision of at least 70 degrees in the horizontal meridian in each eye, and the ability to recognize the colors of traffic signals and devices showing standard red, green, and amber;

(11) First perceives a forced whispered voice in the better ear at not less than 5 feet with or without the use of a hearing aid or, if tested by use of an audiometric device, does not have an average hearing loss in the better ear greater than 40 decibels at 500 Hz, 1,000 Hz, and 2,000 Hz with or without a hearing aid when the audio metric device is calibrated to American National Standard (formerly ASA Standard) Z24.5-1951-1

(12) Does not use a Schedule 1 drug or other substance identified in Appendix D to this subchapter, an amphetamine, narcotic, or any other habit-forming drug, except that a driver may use such a substance or drug if the substance or drug is prescribed by a licensed medical practitioner who is familiar with the driver's medical history and assigned duties and who has advised the driver that the prescribed substance or drug will not adversely affect the driver's ability to safely operate a commercial motor vehicle; and

(13) Has no current clinical diagnosis of alcoholism.

PART ONE

1. *Introduction*

2. *Driving Safely*

3. *Transporting Cargo Safely*

THIS PART IS FOR ALL COMMERCIAL DRIVERS

Section 1: Introduction

This section covers:

- Commercial Driver License Tests
- Other Safety Rules

There is a federal requirement that each state have minimum standards for the licensing of commercial drivers. This manual provides driver license testing information for Wisconsin drivers who wish to have a Commercial Driver License (CDL). Information for drivers who wish to operate a school bus in Wisconsin is contained in Volume 2.

You must have a CDL to operate:

- Any single vehicle with a gross vehicle weight rating (GVWR), actual weight, or registered weight over 26,000 lbs. or such vehicle towing a vehicle with a GVWR, actual weight, or registered weight of 10,000 lbs. or less.
- Any combination of vehicles with a gross vehicle weight rating (GVWR), actual weight, or registered weight over 26,000 lbs. provided the GVWR, actual weight, or registered weight of the towed vehicle(s) is more than 10,000 lbs.
- A vehicle transporting hazardous materials in amounts requiring placarding.
- A vehicle that is designed OR used to transport 16 or more passengers, including the driver.

Any vehicle for which a CDL is required is considered a Commercial Motor Vehicle (CMV).

To get a CDL, you must pass knowledge and skills tests.

1.1 Commercial Driver License Tests

KNOWLEDGE TESTS

You will have to take one or more knowledge tests, depending on what class of license and what endorsements you need. The CDL knowledge tests include:

- The General Knowledge Test, taken by all applicants.
- The Passenger Transport Test, taken by all bus driver applicants.
- The School Bus Test is required if you want to drive a school bus.
- The Air Brakes Test, which you must take if your vehicle has air brakes.
- The Combination Vehicles Test, which is required if you want to drive combination vehicles.
- The Hazardous Materials Test, required if you want to haul hazardous material or waste in amounts which require placarding.
- The Tanker Test, required if you want to haul liquids in bulk.
- The Doubles/Triples Test, required if you want to pull double or triple trailers.

SKILLS TEST

If you pass the required knowledge test(s), you can take the CDL skills tests. There are three types of general skills that will be tested:

- Pre-trip inspection
- Basic vehicle control
- On-road driving

You must take these tests in the type of vehicle for which you wish to be licensed.

> **WI Note:** In WI, you may fail the pre-trip inspection and still continue with the skills tests if the vehicle is safe for highway operation. However, you must still pass the pre-trip before a CDL will be issued.

Pre-trip Vehicle Inspection. You will be tested to see if you know whether your vehicle is safe to drive. You will be asked to do a pre-trip inspection of your vehicle and explain to the examiner what you would inspect and why. Section 10 of this manual tells you what to inspect and how to inspect it.

Basic Vehicle Control. You will be tested on your skill to control the vehicle. You will be asked to move your vehicle forward, backward, and turn it within a defined area. These areas may be marked with traffic lanes, cones, barriers, or something similar. The examiner will tell you how each control test is to be done. Section 11 of this manual explains more about this test.

On-road Test. You will be tested on your skill to safely drive your vehicle in a variety of traffic situations. The situations may include left and right turns, intersections, railroad crossings, curves, up and down grades, single or multi-lane roads, streets or highways. The examiner will tell you where to drive. Section 12 of this manual explains more about this test.

1.2 Other CDL Rules

There are other rules which affect drivers operating CMVs.

- You cannot have more than one license. If you break this rule, a court may fine you up to $5,000 or put you in jail. Keep your home state license and return any others.

- You must notify your employer within 30 days of a conviction for any traffic violations (except parking). This is true no matter what type of vehicle you were driving.

- You must notify your motor vehicle licensing agency within 30 days if you are convicted in any other state of any traffic violation (except parking). This is true no matter what type of vehicle you were driving.

- You must notify your employer within one working day if your CDL privilege is suspended, revoked, canceled or disqualified.

- You must give your employer information on all driving jobs you have held for the past 10 years. You must do this when you apply for a commercial driving job.

- All states are connected to one computerized system to share information about CDL drivers. The states will check on drivers' records to be sure that drivers don't get more than one CDL.

1.3 Wisconsin CDL

WHO IS EXEMPT FROM CDL LICENSING IN WISCONSIN?

Federal law allows states the option to waive certain kinds of drivers from the requirement to obtain a CDL. In Wisconsin, fire fighters, emergency vehicle operators, recreational vehicle drivers and farmers do not need a CDL to operate certain CMVs, but remain subject to the alcohol and traffic rules that apply to all commercial motor vehicle drivers. Wisconsin waivers include:

- **Fire fighters** and rescue squad members will not need a CDL to drive properly equipped emergency or fire fighting vehicles.

- **Recreational vehicle operators** (owned or leased motor home, fifth wheel mobile home, or touring mobile home, provided it isn't longer than 45 feet) not engaged in commercial activity will not need a CDL.

- A **farmer**, his **family members**, and/or his **employees** will not need a CDL to drive a commercial motor vehicle owned or leased by the farmer, provided the vehicle is not used in "for hire" carriage, is transporting farm supplies, produce or machinery to or from the farm and is within 150 miles of the farm. The farm supplies that a farmer may transport without obtaining a CDL may include hazardous materials. However, a farmer driving a commercial motor vehicle with double or triple trailers, or designed to carry or actually carrying 16 or more passengers must have a CDL with proper endorsements.

- Back-up (substitute or replacement) **snowplow drivers** (includes snow or ice removal by plowing, salting or sanding) for local units of government (defined as a county, city, village, town, school district, county utility district, sanitary district, metropolitan sewage district, or other public body created by or pursuant to state law) will not need a CDL if they meet <u>all</u> of the following:

  - Are an employee of a local unit of government with a population of 3,000 or less.

  - Hold a valid Class D license.

  - Are operating within the boundaries of the local unit of government.

  - Are **one** of the following:
    - Substituting for, or replacing, a regular employee who ordinarily operates the vehicle.
    - An additional employee because a snow emergency exists (as determined by the local unit of government).

WHAT IS THE CLASSIFIED LICENSE?

For weight, use GVWR, GCWR, actual or registered weight, whichever is highest.

CLASS A - Any combination of vehicles with a Gross Vehicle Weight Rating (GVWR), actual weight, or registered weight over 26,000 lbs. provided the GVWR, actual weight, or registered weight of the towed vehicle(s) is more than 10,000 lbs.

CLASS B - Any single vehicle with a GVWR, actual weight, or registered weight over 26,000 lbs. or such vehicle towing a vehicle with a GVWR, actual weight, or a registered weight of 10,000 lbs. or less.

CLASS C - Any single vehicle with a GVWR, actual weight, or registered weight of 26,000 lbs. or less (or such vehicle towing a vehicle less than 10,000 lbs.) transporting hazardous materials requiring placarding or designed to carry 16 or more persons including the driver.

CLASS D - Non-Commercial vehicles 26,000 pounds or less.

CLASS M - Motorcycles.

WHAT ARE ENDORSEMENTS?

Wisconsin will issue endorsements for specific types of operation. These endorsements require additional knowledge testing. The endorsement is evidence that you have passed the tests and have the information you need for special operation. You must pass tests and receive an endorsement to operate a:

- **"S" - school bus**
- **"P" - passenger vehicle** - designed to transport or actually transporting 16 or more passengers including the driver
- **"H" - hazardous materials**
- **"N" - tank vehicles** - commercial vehicles equipped with a cargo tank
- **"T" - double or triple trailers** - towing double or triple trailers
- **"F" - farm service** - restricted to farm service operation

Please call the DMV Service Center(s) in your area (numbers are inside the front cover) to estimate time necessary for writing your tests.

WHAT IS A CDL RESTRICTION?

A Wisconsin commercial operator who wants to drive a vehicle with air brakes must pass a special knowledge test on air brake systems. You must also pass a skills test in a vehicle equipped with air brakes. If you choose not to take the air brake tests, you will have a commercial license restriction of "No CMV Operation with Air Brakes". With this restriction on your CDL, you may not legally operate any commercial vehicle with air brakes.

FEDERAL MEDICAL STANDARDS

Applicants for a CDL must meet all federal physical qualifications. To drive in interstate commerce, an applicant must be at least 21 years old. However, applicants ages 18 to 21 may receive a restricted CDL, limited to intrastate (within WI) operation only. The CDL will be restricted to "No CMV Operation in Interstate Commerce".

WHO WAS GRANDFATHERED AND WHAT ARE THE BENEFITS?

Effective July 29, 1996: Drivers of commercial motor vehicles (CMV) operating in intrastate commerce must meet the federal medical standards and present a valid federal medical card when they apply for a commercial driver license (CDL) unless they have been grandfathered or are exempt by federal or state law. A copy of the federal medical standards is available at DMV Service Centers.

Exception - Grandfathering: Drivers who were issued a Wisconsin CDL or CDL instruction permit prior to July 29, 1996 need to meet only Wisconsin medical requirements for intrastate (within Wisconsin only) operation. CDL license will be restricted to "No CMV Operation in Interstate Commerce". However, drivers whose CDLs are revoked on or after July 29, 1996 will lose their Grandfathered status. If they don't meet the state medical standards, drivers are allowed an appeal to the Medical Review Board.

School bus drivers employed by school districts and driving a school bus owned by the district are exempt from the federal standards. They may cross state lines to transport (carry) students between home and school or when driving for curricular or extracurricular activities and charter trips.

School bus drivers employed by a commercial contractor and driving a school bus owned by the contractor are exempt from the federal standards while operating within Wisconsin. They may also cross state lines to transport students between home and school. Operation across state lines for curricular or extra curricular activities and charter trips would require the driver to have a valid federal medical card.

Drivers who do not have a federal medical card and are not grandfathered may be issued a regular CDL or CDL instruction permit with the following two restrictions:

- No CMV operation in interstate commerce.
- No CMV operation in intrastate commerce unless exempted by federal or state law.

Holders of a regular CDL or CDL instruction permit with these two restrictions are limited to the following CMV operations:

- Operate a motor truck or motor bus for a political subdivision provided they are an employee of the political subdivision and the CDL has the proper class and endorsement for the CMV being operated.

- Operate a school bus if they meet the state medical standards for a school bus endorsement and the CDL has the proper class and endorsement for the CMV being operated.

  Note: Drivers who have a CDL instruction permit with both restrictions may not practice operating a truck with a commercial driving school. However, if they are taking a commercial driving class to operate a CMV through a Wisconsin Technical College, they may practice operating with the technical school because it is a political subdivision.

For drivers needing a "P" endorsement, such as those driving buses owned by a municipality (which is exempt), having both restrictions is fine. For others, such as those driving buses for a private human service agency (which is not exempt), the "No CMV operation in Intrastate Commerce" and "No CMV operation in Interstate Commerce" restrictions will not be acceptable and they will need to present the federal medical card, unless grandfathered, to avoid these restrictions. Drivers must know the type of operation in which they will be involved to determine whether or not they need a federal medical card.

If you do not meet the federal visual acuity standard of 20/40 in both eyes but have a federal medical card, you will be referred to a vision or other appropriate medical specialist. If you are issued a permit or license, you will have the "No CMV operation in Interstate Commerce" restriction. If you are not grandfathered, you will also have the "No CMV operation in intrastate Commerce" restriction.

If you are 18, 19 or 20 years of age and have not been grandfathered or are not exempt by federal or state law, you will need a federal medical card if you wish to operate a CMV in intrastate commerce. If you have a federal medical card, your CDL will be issued with the "No CMV Operation in Interstate Commerce" restriction because federal law does not permit a person under age 21 to operate a CMV in interstate commerce.

You can appeal to the Medical Review Board for intrastate driving if you have been grandfathered. If you are a new driver who plans to drive for the exempt groups (political subdivision or school district) you also can appeal to the board. However, the board cannot make any exceptions to the federal standards; therefore, anyone who needs a federal medical card cannot appeal to the board.

IDENTIFICATION REQUIREMENTS

Applicants for commercial driver licenses are required to show their Social Security card. The Social Security number will not appear on the driver license document but will be used to identify driver records between states.

ADDITIONAL TESTING AT RENEWAL FOR "H"

To renew a CDL with an "H" (hazardous materials) endorsement, applicants must pass a hazardous materials knowledge test.

FARM SERVICE CDL

A special, restricted CDL called a Farm Service CDL is available for seasonal drivers of certain CMVs, when employed by specific farm related service industries. Contact your DMV Service Center for details.

INSTRUCTION PERMITS FOR COMMERCIAL DRIVERS

New commercial drivers must get an instruction permit (CDLI) to practice driving a commercial motor vehicle (CMV) to prepare for the CDL skills test. To obtain the permit you must:

- Be at least 18 years of age.
- Hold a valid driver license.
- Pass the knowledge tests for the type of vehicle you will be driving.
- Have a valid federal medical card. Persons who do not have a valid federal medical card will be restricted to:
  - No CMV operation in interstate commerce.
  - No CMV operation in intrastate commerce unless exempted by federal or state law, i.e., employed by a governmental agency or operating a school bus (a state medical form is required for school bus operation).

A CDL instruction permit is valid only for CMVs. The permit is valid for 6 months and will list the type of vehicles and endorsements for which you have qualified. Certain restrictions will apply to your operation with a CDL instruction permit:

- You must have a qualified driving instructor or a person who is licensed to operate that type of CMV, and who is at least 21 years old, sitting next to you at all times.
- You may not transport passengers. However, if the accompanying driver is a qualified instructor, 3 other persons with instruction permits may also ride along.
- You may carry property in a CMV while you are driving on an instruction permit.
- Unless you are at least 21 years old, and have a federal medical certificate (Fed Med Card), you may not operate in interstate commerce on an instruction permit.

Drivers who upgrade class, restrictions, or endorsements will need a CDL instruction permit if the upgrade requires a skills test.

SKILLS TESTING

All applicants for a driver license must pass a skills test in the type of vehicle they plan to drive. The license endorsements for driving a school bus or a commercial motor vehicle carrying passengers require that the applicant pass a skills test in a school bus or passenger carrying vehicle. To schedule a CDL skills test appointment, see inside front cover for the web address or telephone number.

Third-party (non-DMV) testers/examiners are also authorized to administer CDL skills tests. See inside front cover for the web address or telephone number to call for third-party tester information.

SCHOOL BUS LICENSES

Wisconsin school bus drivers will be tested when they first apply for a school bus endorsement. They must also pass the knowledge tests and a brief skills test upon renewal (or, if 70 or older, every 2 years) to retain their endorsements (see 4.7 - 4.10 in Volume 2). Wisconsin school bus drivers must complete a medical report (or show DOT physical exam certificate) on original application and file a new medical report every 2 years and upon renewal (if 70 or older, every year).

FEES

The following fees are in effect as of February, 2000 and are subject to change without notice:

Drivers of non-commercial vehicles

Instruction permits	$25
Original license (probationary & regular)	$18 *
With motorcycle endorsement	$30 *
Renewal license (probationary & regular)	$24 *
Renewal with motorcycle endorsement	$32 *
Driving skills test (road test)	$15

Drivers of commercial vehicles

Instruction permit	$20

Driving skills test (road test)

School buses	$15 **
Other commercial vehicles	$20 **
Commercial driver license	$64

* Add $15.00 fee when driving skills test required.

** This is the fee if the test is given by DMV. Third-party tester fees may be higher.

*** The fee for a commercial driver license (CDL) is for an eight year license. The fee includes any endorsements added at the time of original CDL application. A CDL may be upgraded later to add authorization to drive additional classes or types of vehicles for $5 for each endorsement. When the license upgrade requires a skills test, a skills test fee will also be charged.

SPECIAL NOTES

- A CDL must be renewed every 8 years. Extensions of the 8 year period (temporary licenses, driving receipts, etc.) are not permitted. A valid CDL is necessary at all times.
- If you move (change your address), you must apply for a duplicate CDL (with your new address) within 10 days of moving. Apply at any DMV Service Center.
- Any vehicle considered illegal for highway use, or for use on a skills test route, will not be allowed for skills test purposes.

LEGAL SIZE

The following is general information. For further information on size (and weight) contact your nearest State Patrol Headquarters (see page 8) for complete details.

In general, size limits in Wisconsin are:

length - single vehicle and load, 40'

length - combination of 2 vehicles and load, 65'

width - vehicle and load, 8’6"

height - vehicle and load, 13’6"

LOAD EXTENSIONS

There are a number of exceptions which apply to farm machinery, vehicles involved in towing operations, and vehicles carrying certain types of loads.

One notable exception for length involves cranes or booms that are part of a hauled vehicle.

The load cannot extend beyond the left fender line, but it can extend up to 6" beyond the right fender line and up to 3' beyond the front bumper. Loads extending more than 4' beyond the rear of the vehicle must have a red

flag during daylight hours and a red lamp during hours of darkness attached to the end of the load. Some vehicles can exceed length limitations as follows:

1. 48' for a semi-trailer or trailer operating as part of a two vehicle combination.

2. 53' for a semi-trailer operating on the interstate system or designated routes, if distance from center of kingpin to center of rear axle(s) is not more than 43'.

3. 28’6" for a semi-trailer or trailer operating as part of a double-bottom.

4. 66' plus an additional overhang of 4' to the front of the vehicle and 5' to the rear for an automobile haulaway.

SPECIAL PERMITS

In order to move vehicles exceeding these size, weight, and load extension dimensions, a special permit is required. For information on these moves, visit the website listed inside the front cover. Alternately, you can call the Oversize/Overweight Permit office at (608) 266-7320. Phones are answered Monday through Friday (except Holidays) from 7:45 a.m. to 10:30 a.m. and from 1:00 p.m. to 4:00 p.m., or call the nearest State Patrol District office (see page 8).

Section 2: Driving Safely

This section covers:
- Vehicle Inspection
- Vehicle Control
- Shifting Gears
- Seeing
- Communicating
- Speed & Space Management
- Night Driving
- Winter Driving
- Mountain Driving
- Emergencies
- Staying Alert

This section contains knowledge and safe driving information that all commercial drivers should know. You must pass a test on this information to get a CDL.

This section does not have specific information on air brakes, combination vehicles, doubles, or passenger vehicles. You must read other sections of this manual to learn about them.

This section does have basic information on hazardous materials (HazMat) that all drivers should know. If you need a HazMat endorsement, you should also study Section 9 in Volume 2.

2.1 Vehicle Inspection

Safety for yourself and for other road users is the most important reason you inspect your vehicle.

WHY INSPECT?

A vehicle defect found during an inspection could save you problems later. You could have a breakdown on the road that will cost time and money, or even worse, a crash caused by the defect.

Federal and state laws require that drivers inspect their vehicles. Federal and state inspectors also may inspect your vehicles. If they judge the vehicle to be unsafe, they will put it "out of service" until it is fixed.

TYPES OF VEHICLE INSPECTION

During a Trip. For safety you should:

- Watch gauges for signs of trouble.
- Use your senses to check for problems (look, listen, smell, feel).
- Check critical items when you stop:
  - Tires, wheels and rims.
  - Brakes.
  - Lights and reflectors.
  - Brake and electrical connections to trailer.
  - Trailer coupling devices.
  - Cargo securement devices.

After-Trip Inspection and Report. You should do an after-trip inspection at the end of the trip, day, or tour of duty on each vehicle you operated. It may include filling out a vehicle condition report listing any problems you find. The inspection report helps the motor carrier know when the vehicle needs repairs.

WHAT TO LOOK FOR

Tire Problems.

- Too much or too little air pressure.
- Bad wear. You need at least 4/32 inch tread depth in every major groove on front tires. You need 2/32 inch on other tires. No fabric should show through the tread or sidewall.
- Cuts or other damage.
- Tread separation.
- Dual tires that come in contact with each other or parts of the vehicle.
- Mismatched sizes.
- Radial and bias-ply tires used together.
- Cut or cracked valve stems.
- Regrooved, recapped, or retreaded tires on the front wheels of a bus. These are prohibited.

Wheel and Rim Problems

- Damaged rims.
- Rust around lug nuts may mean the nuts are loose—check tightness. After a tire has been changed, stop a short while later and re-check tightness of nuts.
- Missing clamps, spacers, studs, or lugs means danger.
- Mismatched, bent, or cracked lock rings are dangerous.
- Wheels or rims that have had welding repairs are not safe.

Bad Brake Drums or Shoes

- Cracked drums.
- Shoes or pads with oil, grease, or brake fluid on them.
- Shoes or pads worn dangerously thin, missing, or broken.

Steering System Defects (See Figure 2-1)

- Missing nuts, bolts, cotter keys, or other parts.
- Bent, loose, or broken parts, such as steering column, steering gear box, or tie rods.
- If power steering equipped—hoses, pumps, and fluid level; check for leaks.
- Steering wheel play of more than 10 degrees (approximately 2 inches movement at the rim of a 20-inch steering wheel) can make it hard to steer.

Suspension System Defects. The suspension system holds up the vehicle and its load. It keeps the axles in place. Therefore, broken suspension parts can be extremely dangerous. Look for:

- Spring hangers (Figure 2-2) that allow movement of the axle from the proper position.
- Cracked or broken spring hangers.
- Missing or broken leaves in any leaf spring. If one fourth or more are missing, it will put the vehicle "out of service", but any defect could be dangerous (Figure 2-3).
- Broken leaves in a multi-leaf spring or leaves that have shifted so they might hit a tire or other part.
- Leaking shock absorbers (Figure 2-4).
- Torque rod or arm, U-bolts, spring hangers, or other axle positioning parts that are cracked, damaged, or missing (Figure 2-2).
- Air suspension systems that are damaged and/or leaking (Figure 2-4).
- Any loose, cracked, broken, or missing frame members.

Exhaust System Defects. A broken exhaust system can let poisonous carbon monoxide fumes into the cab or sleeper berth. Look for:

- Loose, broken, or missing exhaust pipes, mufflers, tailpipes, or vertical stacks.

Figure 2-1 Examples of Steering System Key Parts

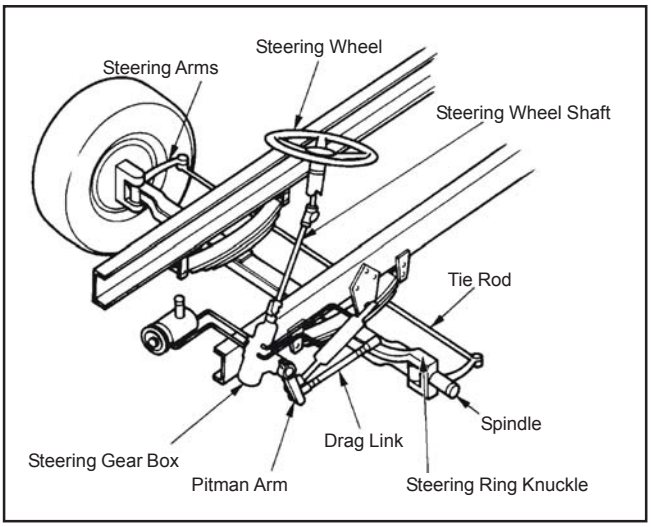

Figure 2-2 Key Suspension Parts

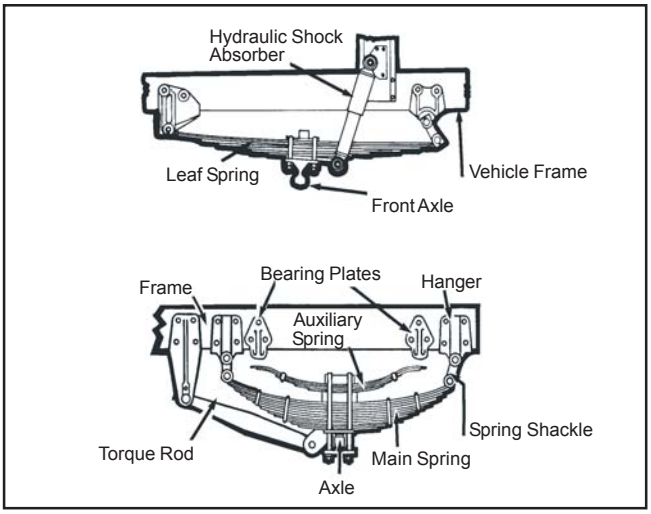

Figure 2-3 Safety Defect: Broken Leaf in Leaf Spring

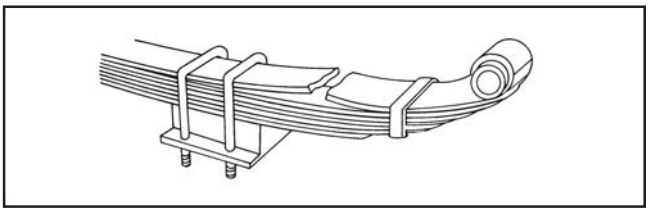

Figure 2-4 Air Suspension Parts

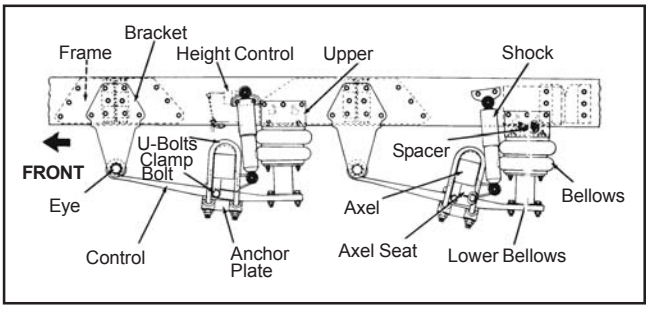

- Loose, broken, or missing mounting brackets, clamps, bolts, or nuts.
- Exhaust system parts rubbing against fuel system parts, tires, or other moving parts of the vehicle.
- Exhaust system parts that are leaking.

Emergency Equipment. Vehicles must be equipped with emergency equipment. Look for:

- Fire extinguisher(s).
- Spare electrical fuses (unless equipped with circuit breakers).
- Warning devices for parked vehicles (for example, three reflective warning triangles).

Cargo (Trucks). You must make sure the truck is not overloaded and the cargo is balanced and secured before each trip. If the cargo contains hazardous materials, you must inspect for proper papers and placarding.

Test Your Knowledge
1. What is the most important reason for doing a vehicle inspection? 2. What things should you check during a trip? 3. Name some key steering system parts. 4. Name some suspension system defects. 5. What three kinds of emergency equipment must you have? 6. What is the minimum tread depth for front tires? 7. What is the minimum tread depth for other tires?
These questions may be on your test. If you are unable to answer them all, re-read pages 2-1 to 2-3.

CDL PRE-TRIP VEHICLE INSPECTION TEST

In order to obtain a CDL you will be required to pass a pre-trip vehicle inspection test. You will be tested to see if you know whether your vehicle is safe to drive. You will be asked to do a pre-trip inspection of your vehicle and explain to the examiner what you would inspect and why. Section 10 of this manual tells you what to inspect and how to inspect it. The guides shown in Section 10 may be used as a memory aid when taking your test.

A SEVEN-STEP INSPECTION METHOD

Method of Inspection. You should do a pre-trip inspection the same way each time so you will learn all the steps and be less likely to forget something. The following seven-step method should be useful.

1: VEHICLE OVERVIEW

Approaching the Vehicle. Notice general condition. Look for damage or vehicle leaning to one side. Look under the vehicle for fresh oil, coolant, grease, or fuel leaks. Check the area around the vehicle for hazards to vehicle movement (people, other vehicles, objects, low hanging wires, tree limbs, etc.)

Review Last Vehicle Inspection Report. Drivers may need to make a vehicle inspection report in writing each day. The motor carrier must repair any items in the report that affects safety and certify on the report that repairs were made or were unnecessary. You must sign the report only if defects were noted and certified to be repaired or repairs were not necessary.

2: CHECK ENGINE COMPARTMENT

Make sure the parking brakes are on and/or the wheels are chocked. You may have to raise the hood, tilt the cab (secure loose things so they don't fall and break something), or open the engine compartment door. Check the following:

- Engine oil level.
- Coolant level in radiator; condition of hoses.
- Power steering fluid level; hose condition (if so equipped).
- Windshield washer fluid level.
- Battery fluid level, connections and tie downs (battery may be located elsewhere).
- Automatic transmission fluid level (may require the engine to be running).
- Check belts for tightness and excessive wear (alternator, water pump, air compressor). Learn how much "give" the belts should have when adjusted right, and check each one.

- Leaks in the engine compartment (fuel, coolant, oil, power steering fluid, hydraulic fluid, battery fluid).

- Cracked, worn electrical wiring insulation.

Lower and secure the hood, cab, or engine compartment door.

Get in and Start Engine

3: START ENGINE AND INSPECT INSIDE THE CAB

- Make sure the parking brake is on.

- Put the gearshift in neutral and depress the clutch pedal (or "park" if automatic).

- Start engine; listen for unusual noises.

- Slowly release the clutch pedal.

Look at the Gauges

- **Oil pressure.** Should come up to normal within seconds after the engine is started.

- **Ammeter** and/or **voltmeter**. Should be in normal range(s).

- **Coolant temperature.** Should begin a gradual rise to normal operating range.

- **Engine oil temperature.** Should begin a gradual rise to normal operating range.

- **Warning lights and buzzers.** Oil, coolant, and charging circuit warning lights should go out right away.

Check Condition of Controls. Check all of the following for looseness, sticking, damage, or improper setting:

- Steering wheel.

- Clutch.

- Accelerator ("gas pedal").

- Brake controls.
  - Service (Foot) brake.
  - Trailer brake (if the vehicle has one).
  - Parking brake.
  - Retarder controls (if the vehicle has them).

- Transmission controls.

- Interaxle differential lock (if the vehicle has one).

- Horn(s).

- Windshield wipers/washers.

- Lights.
  - Headlights.
  - Dimmer switch.
  - Turn signal.
  - 4-way flashers.
  - Clearance, identification, marker light switch(es).

Check Mirrors and Windshield. Inspect the mirrors and windshield for cracks, dirt, illegal stickers, or other vision obstructions. Clean and adjust as necessary.

Check Emergency Equipment

- Check for safety equipment:
  - Spare electrical fuses (unless the vehicle has circuit breakers).
  - Three red reflective triangles.
  - Properly charged and rated fire extinguisher(s).

- Check for optional items such as:
  - Tire chains (where winter conditions require them).
  - Tire changing equipment.
  - List of emergency phone numbers.
  - Accident reporting kit (packet).

4: TURN OFF ENGINE AND CHECK LIGHTS

Make sure the parking brake is set, turn off the engine, and take the key with you. Turn on the headlights (low beams) and four-way flashers, and get out.

5: DO WALK-AROUND INSPECTION

- Go to the front of the vehicle and check that low beams are on and both of the four-way flashers are working.

- Push the dimmer switch and check that high beams work.

- Turn off the headlights and four-way, hazard warning flashers.

- Turn on the parking, clearance, side-marker and identification lights.

- Turn on the right turn signal, and start the walk-around inspection.

General

- Walk around and inspect.

- Clean all lights, reflectors and glass as you go along.

Left Front Side

- Driver's door glass should be clean.

- Door latches or locks must work properly.

- Left front wheel.
  - Condition of wheel and rim - missing, bent, broken studs, clamps, lugs, or any signs of misalignment.
  - Condition of tires - properly inflated, valve stem and cap OK, no serious cuts, bulges, tread wear and tread depth.
  - Use a wrench to test rust-streaked lug nuts, indicating looseness.
  - Hub oil level OK, no leaks.

- Left front suspension.
  - Condition of the springs, spring hangers, shackles, u-bolts.
  - Shock absorber condition.
  - Condition of air suspension components (if equipped).

- Left front brake.
  - Condition of the brake drum or rotor.
  - Condition of the hoses.
  - Condition of the brake shoes or pads.
  - Condition of the slack adjustor and the brake chamber (if airbrake quipped).

Front

- Condition of the front axle.

- Condition of the steering system.
  - No loose, worn, bent, damaged, or missing parts.
  - Must grab the steering mechanism to test for looseness.

- Condition of the windshield.
  - Check for damage and clean it if it is dirty.
  - Check the windshield wiper arms for proper spring tension.
  - Check the wiper blades for damage, “stiff” rubber, and securement.

- Lights and reflectors.
  - Parking, clearance and identification lights are clean, operating, and the proper color (amber at front).
  - Reflectors are clean and the proper color (amber at front).

- Right front turn signal light is clean, operating, and is the proper color (amber or white on signals facing forward).

Right Side

- Right front: check all items same as left front.

- Primary and secondary safety cab locks engaged (if cab-over-engine design).

- Right fuel tank(s).
  - Securely mounted, not damaged or leaking.
  - Fuel crossover line is secure.
  - Tank(s) contain enough fuel.
  - Cap(s) are on and secure.

- Condition of visible parts.
  - Rear of engine - not leaking.
  - Transmission - not leaking.
  - Exhaust system - secure, not leaking, not touching wires, fuel, or air lines.
  - Frame and cross members - no bends, or cracks.
  - Air lines and electrical wiring - secured against snagging, rubbing, or wearing.
  - Spare tire carrier or rack is not damaged (if so equipped).
  - Spare tire and/or wheel is securely mounted in rack.
  - Spare tire and wheel is adequate (proper size, properly inflated).

- Cargo securement (trucks).
  - Cargo is properly blocked, braced, tied, chained, etc.
  - Header board is adequate, and secure (if required).
  - Side boards, stakes are strong enough, free of damage, properly set in place (if so equipped).
  - Canvas or tarp (if required) is properly secured to prevent tearing, billowing, or blocking of mirrors.
  - If oversize, all required signs (flags, lamps, and reflectors) must be safely and properly mounted and all required permits are in driver’s possession.
  - Curbside cargo compartment doors are securely closed, latched/locked, required security seals are in place.

Right Rear

- Condition of wheels and rims - no missing, bent, broken spacers, studs, clamps, or lugs.

- Condition of tires - properly inflated, valve stems and caps are okay, no serious cuts, bulges, tread wear, tread depth, tires not rubbing each other and nothing is stuck between them.

- Tires are of the same type, e.g., not mixed radial and bias types.

- Tires are evenly matched (same sizes).

- Wheel bearing/seals are not leaking.

- Suspension.
  - Condition of spring(s), spring hangers, shackles, and U-bolts.
  - Axle is secure.
  - Powered axle(s) is not leaking lube (gear oil).
  - Condition of the torque rod arms, bushings.
  - Condition of the shock absorber(s).
  - If retractable axle equipped, check the condition of the lift mechanism. If air powered, check for leaks.
  - Condition of air suspension components (if equipped).

- Brakes.
  - Brake adjustment.
  - Condition of the brake drum(s) or rotor.
  - Condition of the hoses - look for any wear due to rubbing.
  - Condition of the brake shoes or pads.
  - Condition of the slack adjusters and the brake chamber (if air brake equipped).

- Lights and reflectors.
  - Side-marker lights are clean, operating, and are the proper color (red at rear, others amber).
  - Side-marker reflectors are clean and are the proper color (red at rear, others amber).

Rear

- Lights and reflectors.
  - Rear clearance and identification lights are clean, operating, and are the proper color (red at rear).
  - Reflectors are clean and are the proper color (red at rear).
  - Taillights are clean, operating, and are the proper color (red at rear).
  - Right rear turn signal is operating, and is the proper color (red, yellow, or amber at rear).

- License plate(s) are present, clean, and secured.

- Splash guards are present, not damaged, properly fastened, not dragging on the ground or rubbing tires.

- Cargo secure (trucks).
  - Cargo is properly blocked, braced, tied, chained, etc.
  - Tailboards are up and properly secured.
  - End gates are free of damage, and are properly secured in stake sockets.
  - Canvas or tarp (if required) is properly secured to prevent tearing or billowing to block either the rearview mirrors or to cover the rear lights.
  - If over-length or over-width, make sure all signs and/or additional lights/flags are safely and properly mounted and all required permits are in the driver's possession.
  - Rear doors are securely closed, latched/locked.

Left Side

- Check all items same as right side, plus:
  - Battery(s) (if not mounted in engine compartment).
  - Battery(s) box is securely mounted to vehicle.
  - Box has secure cover.
  - Battery(s) is secured against movement.
  - Battery(s) is not broken or leaking
  - Fluid in battery(s) is at the proper level (except maintenance-free type).
  - Cell caps are present and are securely tightened (except maintenance-free type).
  - Vents in cell caps are free of foreign material (except maintenance-free type).

6: CHECK SIGNAL LIGHTS

Get In and Turn Off Lights.

- Turn off all lights.

- Turn on the stop lights (apply trailer hand brake or have a helper put on the brake pedal).

- Turn on the left turn signal lights.

Get Out and Check Lights.

- Left front turn signal light is clean, operating and is the proper color (amber or white on signals facing the front).

- Left rear turn signal light and both stop lights are clean, operating, and are the proper color (red, yellow, or amber).

Get In Vehicle.

- Turn off any lights not needed for driving.

- Check for all required papers, trip manifests, permits, etc.

- Secure all loose articles in the cab (they may interfere with operation of the controls or hit you in a crash).

- Start the engine.

7: START THE ENGINE AND CHECK BRAKE SYSTEM

Test For Hydraulic Leaks. If the vehicle has hydraulic brakes, apply firm pressure to the pedal and hold for five seconds. The pedal should not move. If it does, there may be a leak or other problem. Get it fixed before driving.

If the vehicle has air brakes, do the checks described in Sections 5 and 6 of this manual.

Test Parking Brake

- Fasten your seat belt.

- Allow the vehicle to move forward **slowly**.

- Apply the parking brake.

- If it does not stop the vehicle, it is faulty and needs to be fixed.

Test Service (Foot) Brake Stopping Action

- Go about five miles per hour.

- Push the brake pedal firmly.
- ”Pulling” to one side or the other can mean brake trouble.
- Any unusual brake pedal “feel” or delayed stopping action can mean trouble.

This completes the pretrip inspection.

If you find anything unsafe during the pre-trip inspection, get it fixed. Federal and state laws forbid operating an unsafe vehicle.

INSPECTION DURING A TRIP

Check Vehicle Operation Regularly

You should check:

- Instruments.
- Air pressure gauge (if you have air brakes).
- Temperature gauges.
- Pressure gauges.
- Ammeter/voltmeter.
- Mirrors.
- Tires.
- Cargo, cargo covers.

If you see, hear, smell, or feel anything that might mean trouble, check it out.

Safety Inspection

- Drivers of trucks and truck tractors when transporting cargo must inspect the securement of the cargo within the first 25 miles of a trip and every 150 miles or every 3 hours (whichever comes first) afterward.

You may have to make a written report each day on the condition of the vehicle(s) you drove. Report anything affecting safety or possibly leading to a mechanical breakdown.

AFTER-TRIP INSPECTION AND REPORT

The vehicle inspection report tells the motor carrier about problems that may need fixing. Keep a copy of your report in the vehicle for one day. That way, the next driver can learn about any problems you have found.

Test Your Knowledge

1. Name some things you should check on the front of your vehicle during the walk-around inspection.
2. What should wheel bearing seals be checked for?
3. How many red reflective triangles should you carry?
4. How do you test hydraulic brakes for leaks?
5. Can you bring the “vehicle inspection memory aide” with you to the test?
6. Why put the starter switch key in your pocket during the pre-trip inspection?

These questions may be on your test. If you are unable to answer them all, re-read the seven-step inspection method on pages 2-3 through 2-7.

2.2 Basic Control of Your Vehicle

To drive a vehicle safely, you must be able to control its speed and direction. Safe operation of a commercial vehicle requires skill in:

- Accelerating.
- Steering.
- Shifting gears.
- Braking.

Fasten your seatbelt when on the road. Apply the parking brake when you leave your vehicle.

STARTING OUT

Don’t roll back when you start. You may hit someone behind you. Partly engage the clutch before you take your right foot off the brake. Put on the parking brake whenever necessary to keep from rolling back. Release the parking brake only when you have applied enough engine power to keep from rolling back. On a tractor-trailer equipped with a trailer brake hand valve, the hand valve can be applied to keep from rolling back.

ACCELERATING

Speed up smoothly and gradually so the vehicle does not jerk. Rough acceleration can cause mechanical damage. When pulling a trailer, rough acceleration can damage the coupling device.

Speed up very gradually when traction is poor, as in rain or snow. If you use too much power, the drive wheels may spin. You could lose control. If the drive wheels begin to spin, take your foot off the accelerator.

STEERING

Hold the Wheel Properly. Hold the steering wheel firmly with both hands. Your hands should be on opposite sides of the wheel. If you hit a curb or a pothole (chuckhole), the wheel could pull away from your hands unless you have a firm hold.

BACKING SAFELY

Because you cannot see everything behind your vehicle, **backing is always dangerous**. Avoid backing whenever you can. When you park, try to park so you will be able to pull forward when you leave. When you have to back, here are a few simple safety rules:

- Look at your path.
- Back slowly using the 4-way hazard lights.
- Back and turn toward the driver's side whenever possible.
- Use a helper whenever possible.
- Get out and look.

These rules are discussed in more detail below.

Look at Your Path. Look at your line of travel **before** you begin. Get out and walk around the vehicle. Check your clearance to the sides and overhead in and near the path your vehicle will take.

Back Slowly. Activate 4-way hazard lights before backing. Always back as slowly as possible. Use the lowest reverse gear. That way you can more easily correct any steering errors. You can also stop quickly if necessary.

Back And Turn Toward The Driver's Side So You Can See Better. Backing toward the right side is very dangerous because you can't see as well. If you back and turn toward the driver's side, you can watch the rear of your vehicle by looking out the side window. Use driver-side backing even if it means going around the block to put your vehicle in this position. The added safety is worth it.

Use a Helper When You Can. There are blind spots you can't see. That's why a helper is important.

The helper should stand near the back of your vehicle where you can see the helper. Before you begin backing, work out a set of hand signals that you both understand. Agree on a signal for "stop."

BACKING WITH A TRAILER

When backing a car, straight truck, or bus, you turn the top of the steering wheel toward the direction you want to go. When backing a trailer, you turn the steering wheel in the opposite direction. Once the trailer starts to turn, you must turn the wheel the other way to follow the trailer.

Whenever you back with a trailer, try to position your vehicle so you can back in a straight line. If you must back on a curved path, back to the driver's side so you can see.

Back Slowly. This will let you make corrections before you get too far off course.

Use the Mirrors. The mirrors will help you see whether the trailer is drifting to one side or the other.

Correct Drift Immediately. As soon as you see the trailer getting off the proper path, correct it by turning the top of the steering wheel in the direction of the drift.

Pull Forward. When backing a trailer, make pull-ups to reposition your vehicle as needed.

G.O.A.L. Get out and look if you are unsure what is behind you.

Test Your Knowledge
1. Why should you back toward the driver's side? 2. What is a pull-up? 3. If stopped on a hill, how can you start moving without rolling back? 4. When backing, why is it important to use a helper? 5. What is the most important hand signal that you and the helper should agree on?
These questions may be on your test. If you are unable to answer them all, re-read Section 2.2 Basic Control of Your Vehicle.

2.3 Shifting Gears

Correct shifting of gears is important. If you can't get your vehicle into the right gear while driving, you will have less control.

MANUAL TRANSMISSIONS

Basic Method for Shifting Up. Most heavy vehicles with manual transmissions require double clutching to change gears. This is the basic method:

1. Release the accelerator, push in the clutch and shift to neutral at the same time.

2. Release the clutch.

3. Let the engine and gears **slow down** to the RPM required for the next gear (this takes practice).

4. Push in the clutch and shift to the higher gear at the same time.

5. Release the clutch and press the accelerator at the same time.

Shifting gears using double clutching requires practice. If you remain too long in neutral, you may have difficulty putting the vehicle into the next gear. If so, don't try to force it. Return to neutral, release the clutch, increase the engine speed to match the road speed, and try again.

Knowing When to Shift Up. There are two ways of knowing when to shift:

Use Engine Speed (RPM). Study the owner's manual for your vehicle and learn the operating RPM range. Watch your tachometer, and shift up when your engine reaches the top of the range. (Some newer vehicles use "progressive" shifting: the RPM at which you shift becomes higher as you move up in the gears. Find out what's right for the vehicle you will operate.)

Use Road Speed (MPH). Learn what speeds each gear is good for. Then, by using the speedometer, you'll know when to shift up.

With either method, you may learn to use engine sounds to know when to shift.

Basic Procedures for Shifting Down

1. Release the accelerator, push in the clutch, and shift to neutral at the same time.

2. Release the clutch.

3. Press the accelerator, **increase** the engine and gear speed to the RPM required in the lower gear.

4. Push in the clutch and shift to a lower gear at the same time.

5. Release the clutch.

Downshifting, like upshifting, requires knowing when to shift. Use either the tachometer or the speedometer and downshift at the right RPM or road speed.

Special conditions where you should downshift are:

Before Starting Down a Hill. Slow down and shift down to a speed that you can control without using the brakes hard. Otherwise the brakes can overheat and lose their braking power. Downshift **before** starting down the hill. Make sure you are in a low enough gear. Gear selection should be based on the steepness of the grade, weather, road conditions and your load.

Before Entering a Curve. Slow down to a safe speed and downshift to the right gear before entering the curve. This lets you use some power through the curve to help the vehicle be more stable while turning. It also lets you speed up as soon as you are out of the curve.

MULTI-SPEED REAR AXLES AND AUXILIARY TRANSMISSIONS

Multi-speed rear axles and auxiliary transmissions are used on many vehicles to provide extra gears. You usually control them by a selector knob or switch on the gearshift lever of the main transmission. There are many different shift patterns. Learn the right way to shift gears in the vehicle you will drive.

AUTOMATIC TRANSMISSIONS

Some vehicles have automatic transmissions. You can select a low range to get greater engine braking when going down grades. The lower ranges prevent the transmission from shifting up beyond the selected gear (unless the governor RPM is exceeded). It is very important to use this braking effect when going down grades.

RETARDERS

Some vehicles have retarders which help slow a vehicle, reducing the need for using your brakes. They reduce brake wear and give you another way to slow down. There are many types of retarders (exhaust, engine, hydraulic, electric). All retarders can be turned on or off by the driver. On some, the retarding power can be adjusted. When turned "on," retarders apply their braking power (to the drive wheels only) whenever you let up on the accelerator pedal all the way.

> **Caution.** When your drive wheels have poor traction, the retarder can cause them to skid. Therefore, you should turn the retarder off whenever the road is wet, icy, or snow covered.

Test Your Knowledge

1. What are the two special conditions where you should downshift?
2. When should you downshift automatic transmissions?
3. True or False? Retarders keep you from skidding when the road is slippery.
4. What are the two ways to know when to shift?

These questions may be on your test. If you are unable to answer them all, re-read Section 2.3: Shifting Gears.

2.4 Seeing

To be a safe driver you need to know what's going on all around your vehicle. Not looking properly is a major cause of accidents.

SEEING AHEAD

All drivers look ahead; but many don't look **far enough** ahead.

Importance of Looking Far Enough Ahead. Because stopping or changing lanes can take a lot of distance, knowing what the traffic is doing on all sides of you is very important. You need to look well ahead to make sure you have room to make these moves safely.

How Far Ahead to Look. Most good drivers look 12 to 15 seconds ahead. That means looking ahead the distance you will travel in 12 to 15 seconds. At lower speeds, that's about one block. At highway speeds it's about a quarter of a mile. If you're not looking that far ahead, you may have to stop too quickly or make quick lane changes. Looking 12 to 15 seconds ahead doesn't mean not paying attention to things that are closer. Good drivers shift their attention back and forth, near and far.

Look for Traffic. Look for vehicles coming onto the highway, into your lane, or turning. Watch for brakelights from slowing vehicles. By seeing these things far enough ahead, you can change your speed or change lanes, if necessary, to avoid a problem.

Look for Road Conditions. Look for hills and curves - anything for which you will need to slow or change lanes. Pay attention to traffic signals and signs. If a light has been green for a long time, it will probably change before you get there. Start slowing down and be ready to stop. Traffic signs may alert you to road conditions where you may need to change speed.

SEEING TO THE SIDES AND REAR

It is important to know what's going on behind and to the sides. Check your mirrors regularly. Check more often in special situations.

Mirror Adjustment. Mirror adjustment should be checked prior to the start of any trip and can only be checked accurately when the trailer(s) are straight. You should check and adjust each mirror as needed.

Regular Checks. You need to make regular checks of your mirrors to be aware of traffic and to check your vehicle.

Traffic. Check your mirrors for vehicles on either side and behind you. In an emergency, you may need to know whether you can make a quick lane change. Use your mirrors to spot overtaking vehicles. There are "blind spots" that your mirrors cannot show you. Check your mirrors regularly to know where other vehicles are around you, and to see if they move into your blind spots.

Check Your Vehicle. Use the mirrors to keep an eye on your tires. It's one way to spot a tire fire. If you're carrying open cargo, you can use the mirrors to check it. Look for loose straps, ropes, or chains. Watch for a flapping or ballooning tarp.

Special Situations. Special situations require more than regular mirror checks. These are lane changes, turns, merges, and tight maneuvers.

Lane Changes. You need to check your mirror to make sure no one is alongside you or about to pass you. Check your mirrors:

- Before you change lanes to make sure there is enough room.
- After you have signaled to make sure no one has moved into your blind spot.
- Right after you start the lane change to double-check that your path is clear.
- After you complete the lane change.

Turns. In turns, check your mirrors to make sure the rear of your vehicle will not hit anything.

Merges. When merging, use your mirrors to make sure the gap in traffic is large enough for you to enter safely.

Tight Maneuvers. Any time you are driving in close quarters check your mirrors often. Make sure you have enough clearance.

How to Use Mirrors. Use mirrors correctly by checking them quickly and understanding what you see.

- **Checking quickly.** When you use your mirrors while driving on the road, check quickly. Look back and forth between the mirrors and the road ahead. Don't focus on the mirrors for too long. Otherwise, you will travel quite a distance without knowing what's happening ahead.

- **Understanding what you see.** Many large vehicles have curved (convex, "fisheye," "spot," "bugeye") mirrors that show a wider area than flat mirrors. This is often helpful. But everything appears smaller in a convex mirror than it would if you were looking at it directly. Things also seem farther away than they really are. It's important to realize this and to allow for it.

2.5 Communicating

Other drivers can't know what you are going to do until you tell them.

SIGNAL YOUR INTENTIONS

Signaling what you intend to do is important for safety. Here are some general rules for signaling.

Turns. There are three good rules for using turn signals.

1. Signal early. Signal well before you turn. It is the best way to keep others from trying to pass you.

2. Signal continuously. You need both hands on the wheel to turn safely. Don't cancel the signal until you have completed the turn.

3. Cancel your signal. Don't forget to turn off your turn signal after you've turned (if you don't have self-canceling signals).

Lane Changes. Put your turn signal on before changing lanes. Change lanes slowly and smoothly. That way a driver you didn't see may have a chance to honk his/her horn or avoid your vehicle.

Slowing Down. Warn drivers behind you when you see you'll need to slow down. A few light taps on the brake pedal - enough to flash the brake lights - should warn following drivers. Use the 4-way emergency flashers for times when you are driving very slow or are stopped. Warn other drivers in any of the following situations:

Trouble Ahead. The size of your vehicle may make it hard for drivers behind you to see hazards ahead. If you see a hazard that will require slowing down, warn the drivers behind you by flashing your brake lights.

Tight Turns. Most car drivers don't know how slow you have to go to make a tight turn in a large vehicle. Give drivers behind you warning by braking early and slowing gradually.

Stopping on the Road. Truck and bus drivers sometimes stop in the road to unload cargo or passengers, or to stop at a railroad crossing. Warn following drivers by flashing your brake lights. Don't stop suddenly.

Driving Slowly. Drivers often do not realize how fast they are catching up to a slow vehicle until they are very close. If you must drive slowly, alert following drivers by turning on your emergency flashers if it is legal. (Laws regarding the use of flashers differ from one state to another. Check the laws of the states where you will drive.)

Don't Direct Traffic. Some drivers try to help out others by signaling when it is safe to pass. You should not do this. You could cause an accident. You could be blamed and it could cost you many thousands of dollars.

COMMUNICATING YOUR PRESENCE

Other drivers may not notice your vehicle even when it's in plain sight. Let them know you're there to help prevent accidents.

When Passing. Whenever you are about to pass a vehicle, pedestrian, or bicyclist, assume they don't see you. They could suddenly move in front of you. Drive carefully enough to avoid a crash even if they don't see or hear you.

When It's Hard to See. At dawn or dusk, or in rain or snow, you need to make yourself easier to see. If you are having trouble seeing other vehicles, other drivers will have trouble seeing you. Turn on your lights. Use the headlights, not just the identification or clearance lights. Use the low beams; high beams can bother people in the daytime as well as at night.

When Parked at the Side of the Road. When you pull off the road and stop, be sure to turn on the 4-way emergency flashers. This is important at night. Don't trust the taillights to give warning. Drivers have crashed into the rear of a parked vehicle because they thought it was moving normally.

If you must stop on a road or the shoulder of any road, you must put out your emergency warning devices within 10 minutes. Place your warning devices at the following locations:

- If you stop on a 2-lane road carrying traffic in both

directions or on an undivided highway, place warning devices within 10 feet of the front or rear corners to mark the location of the vehicle and 100 feet behind and ahead of the vehicle, on the shoulder or in the lane in which you are stopped. (See Figure 2-5.)

- Back beyond any hill, curve, or other obstruction that prevents other drivers from seeing the vehicle within 500 feet. (See Figure 2-6.)

- If you must stop on or by a one-way or divided highway, place warning devices 10 feet, 100 feet, and 200 feet toward the approaching traffic. (See Figure 2-7.)

When putting out the triangles, hold them between yourself and the oncoming traffic for your own safety so other drivers can see you.

Use Your Horn When Needed. Your horn can let others know you're there. It can help to avoid a crash. Use your horn when needed. However, it can startle others and could be dangerous when used unnecessarily.

Figure 2-6 Warning Device Placement: Obstructed View

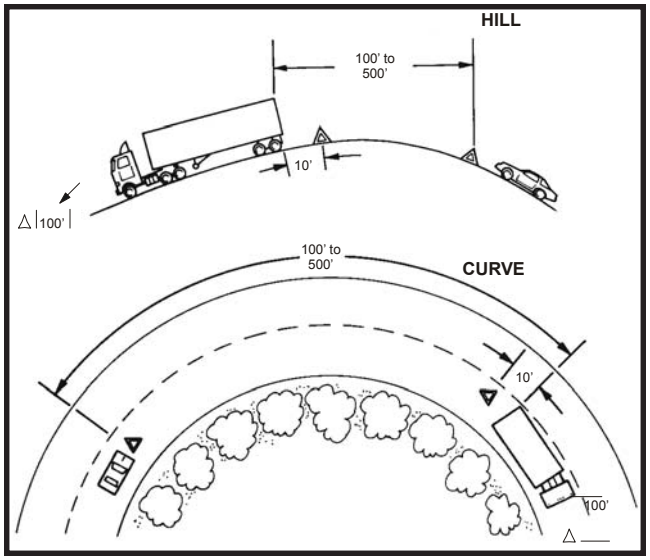

Figure 2-5 Warning Device Placement: Two Lane (traffic in both directions) or Undivided Highway

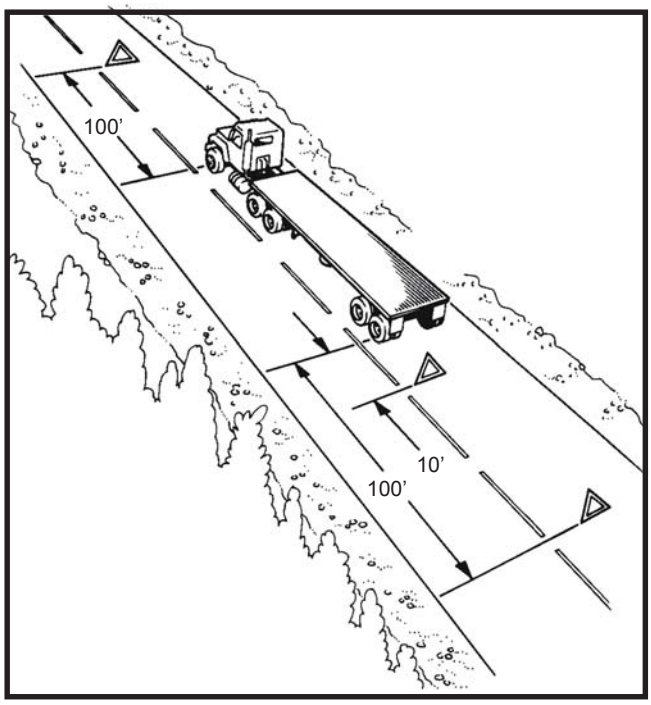

Figure 2-7 Warning Device Placement: One Way or Divided Highway

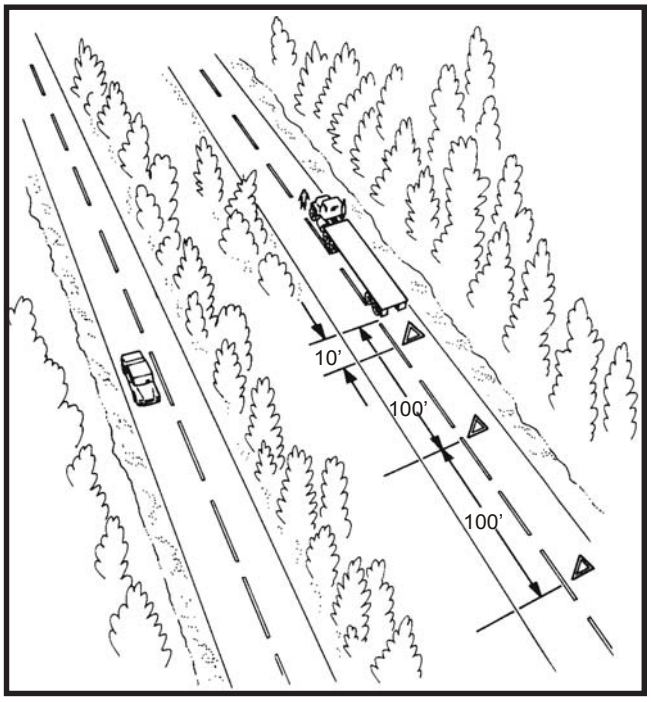

2.6 Controlling Speed

Driving too fast is a major cause of fatal crashes. You must adjust your speed depending on driving conditions. These include traction, curves, visibility, traffic, and hills.

SPEED AND STOPPING DISTANCES

There are three things that add up to total stopping distance:

	Perception Distance
+	Reaction Distance
+	Braking Distance
=	Total Stopping Distance

- **Perception distance.** This is the distance your vehicle travels from the time your eyes see a hazard until your brain recognizes it. The perception time for an alert driver is about ¾ second. At 55 mph, you travel **60** feet in ¾ second.

- **Reaction distance.** The distance traveled from the time your brain tells your foot to move from the accelerator until your foot is actually pushing the brake pedal. The average driver has a reaction time of ¾ second. This accounts for an additional **60** feet traveled at 55 mph.

- **Braking distance.** The distance it takes to stop once the brakes are applied. At 55 mph on dry pavement with good brakes it can take a heavy vehicle about **170** feet to stop. It takes about 4½ seconds.

- **Total stopping distance.** At 55 mph it will take about 6 seconds to stop and your vehicle will travel about the distance of a football field. (**60 + 60 + 170** = 290 feet.)

The Effect of Speed on Stopping Distance. Whenever you double your speed, it takes about **four** times as much distance to stop and your vehicle will have **four** times the destructive power if it crashes. High speeds increase stopping distances greatly. By slowing down a little, you can gain a lot in reduced braking distance.

The Effect of Vehicle Weight on Stopping Distance. The heavier the vehicle, the more work the brakes must do to stop it and the more heat they absorb. But the brakes, tires, springs, and shock absorbers on heavy vehicles are designed to work best when the vehicle is fully loaded. **Empty** trucks require **greater** stopping distances, because an empty vehicle has less traction. It can bounce and lock up its wheels, giving much poorer braking. (This is not usually the case with buses, though.)

MATCHING SPEED TO THE ROAD SURFACE

You can't steer or brake a vehicle unless you have traction. Traction is friction between the tires and the road. There are some road conditions that reduce traction and call for lower speeds.

Slippery Surfaces. It will take longer to stop and it will be harder to turn without skidding when the road is slippery. You must drive slower to be able to stop in the same distance as on a dry road. Wet roads can **double** stopping distance. Reduce speed by about one third (e.g., slow from 55 to about 35 mph) on a wet road. On packed snow, reduce speed by a half, or more. If the surface is icy, reduce speed to a crawl and stop driving as soon as you can safely do so.

Identifying Slippery Surfaces. Sometimes it is hard to know if the road is slippery. Here are some signs of slippery roads:

- **Shaded areas.** Shady parts of the road will remain icy and slippery long after open areas have melted.

- **Bridges.** When the temperature drops, bridges will freeze before the road will. Be especially careful when the temperature is close to 32 degrees F.

- **Melting ice.** Slight melting will make ice wet. Wet ice is much more slippery than ice that is not wet.

- **Black ice.** Black ice is a thin layer that is clear enough that you can see the road underneath it. It makes the road look wet. Any time the temperature is below freezing and the road looks wet, watch out for black ice.

- **Vehicle icing.** An easy way to check for ice is to open the window and feel the front of the mirror, mirror support, or antenna. If there's ice on these, the road surface is probably starting to ice up, too.

- **Just after rain begins.** Right after it starts to rain, the water mixes with oil left on the road by vehicles. This makes the road very slippery. If the rain continues, it will wash the oil away.

- **Hydroplaning.** In some weather, water or slush collects on the road. When this happens, your vehicle can hydroplane. It's like water skiing; the tires lose their contact with the road and have little or no traction. You may not be able to steer or brake. You can regain control by releasing the accelerator and pushing in the clutch. This will slow your vehicle and let the wheels turn freely. If the vehicle is hydroplaning, do not use the brakes to slow down. If the drive wheels start to skid, push in the clutch to let them turn freely.

It does not take a lot of water to cause hydroplaning. Hydroplaning can occur at speeds as low as 30 mph if there is a lot of water. Hydroplaning is more likely if tire pressure is low or the tread is worn. (The grooves in a tire carry away the water; if they aren't deep, they don't work well.) Be especially careful driving through puddles. The water is often deep enough to cause hydroplaning.

SPEED AND CURVES

Drivers must adjust their speed for curves in the road. If you take a curve too fast, two things can happen. The tires can lose their traction and continue straight ahead, so you skid off the road. Or, the tires may keep their traction and the vehicle rolls over.

Tests have shown that trucks with a high center of gravity can roll over at the posted speed limit for a curve. Slow to a safe speed **before** you enter a curve. Braking in a curve is dangerous because it is easier to lock the wheels and cause a skid. Slow down as needed. Don't ever exceed the posted speed limit for the curve. Be in a gear that will let you accelerate slightly in the curve. This will help you keep control.

SPEED AND DISTANCE AHEAD

You should always be able to stop within the distance you can see ahead. Fog, rain or other conditions may require that you slow down to be able to stop within the distance you can see. At night, you can't see as far with low beams as you can with high beams. When you must use low beams, slow down.

SPEED AND TRAFFIC FLOW

When you're driving in heavy traffic, the safest speed is the speed of other vehicles. Vehicles going the same direction at the same speed are not likely to run into one another. Drive at the speed of the traffic, if you can, without going at an illegal or unsafe speed. Keep a safe following distance.

The main reason drivers exceed speed limits is to save time. But anyone trying to drive faster than the speed of traffic will not be able to save much time. The risks involved are not worth it. If you go faster than the speed of other traffic, you will need to keep passing other vehicles. This increases the chance of a crash, and it is more tiring. Fatigue increases the chance of a crash. Going with the flow of traffic is safer and easier.

SPEED ON DOWNGRADES

Your vehicle's speed will increase on downgrades because of gravity. Your most important objective is to select and maintain a speed that is not too fast for the:

- Total weight of the vehicle and cargo.
- Length of the grade.
- Steepness of the grade.
- Road conditions.
- Weather.

If a speed limit is posted, or there is a sign indicating "Maximum Safe Speed," never exceed the speed shown. Also, look for and heed warning signs indicating the length and steepness of the grade. You must use the braking effect of the engine as the principal way of controlling your speed on downgrades. The braking effect of the engine is greatest when it is near the governed RPMs and the transmission is in the lower gears. Save your brakes so you will be able to slow or stop as required by road and traffic conditions. Shift your transmission to a low gear before starting down the grade and use the proper braking techniques. Carefully read Section 2.13 "Mountain Driving" on going down long steep downgrades safely.

Test Your Knowledge

1. How far ahead should you look?
2. What are two main things to look for ahead?
3. What's your most important way to see the sides and rear?
4. What does "communicating " mean in safe driving?
5. Where should your reflectors be placed when stopped on a divided highway?
6. What three things add up to total stopping distance?
7. If you go twice as fast, will your stopping distance increase by two or four times?
8. True or False? Empty trucks have the best braking.
9. What is hydroplaning?
10. What is "black ice?"

These questions may be on your test. If you are unable to answer them all, re-read Sections 2.4, 2.5, and 2.6.

2.7 Managing Space

To be a safe driver, you need space all around your vehicle. When things go wrong, space gives you time to think, react and take action.

To have space available when something goes wrong, you need to **manage** space. While this is true for all drivers, it is very important for large vehicles. They take up more space and they require more space for stopping and turning.

Of all the space around your vehicle, it is the area ahead of the vehicle - the space you're driving into - that is most important.

SPACE AHEAD

The Need for Space Ahead. You need space ahead in case you must suddenly stop. According to accident reports, the vehicle that trucks and buses most often run into is the one in front of them. The most frequent cause is **following too closely**. Remember, if the vehicle ahead of you is smaller than yours, it can probably stop faster than you can. You may crash if you are following too closely.

How Much Space? How much space should you keep in front of you? One good rule says you need at least one second for each 10 feet of vehicle length at speeds below 40 mph. At greater speeds, you must add one second for safety. For example, if you are driving a 40-foot vehicle, you should leave 4 seconds between you and the vehicle ahead. In a 60-foot rig, you'll need 6 seconds. Over 40 mph, you'd need 5 seconds for a 40-foot vehicle and 7 seconds for a 60-foot vehicle.

To know how much space you have, wait until the vehicle ahead passes a shadow on the road, a pavement marking, or some other clear landmark. Then count off the seconds like this: "one thousand-and-one, one thousand-and-two" and so on, until you reach the same spot. Compare your count with the rule of one second for every 10 feet of length. If you are driving a 40 foot truck and only counted up to 2 seconds, you're too close. Drop back a little and count again until you have 4 seconds of following distance (or 5 seconds, if you're going over 40 mph). After a little practice, you will know how far back you should be. Remember to add one second for speeds above 40 mph. Also remember that when the road is slippery, you need **much more space** to stop.

SPACE BEHIND

You can't stop others from following you too closely. But there are things you can do to make it safer.

Stay to the Right. Heavy vehicles are often tailgated when they can't keep up with the speed of traffic. This often happens when you're going uphill. If a heavy load is slowing you down, stay in the right lane if you can. Going uphill, you should not pass another slow vehicle unless you can get around it quickly and safely.

Dealing with Tailgaters Safely. In a large vehicle, it's often hard to see whether a vehicle is close behind you. You may be tailgated:

- When you are traveling slowly. Drivers trapped behind slow vehicles often follow closely.
- In bad weather. Many car drivers follow large vehicles closely during bad weather, especially when it is hard to see the road ahead.

If you find yourself being tailgated, here are some things you can do to reduce the chances of a crash:

- Avoid quick changes. If you have to slow down or turn, signal early and reduce speed gradually.
- Increase your following distance. Opening up room in front of you will help you to avoid having to make sudden speed or direction changes. It also makes it easier for the tailgater to get around you.
- Don't speed up. It's safer to be tailgated at a low speed than a high speed.
- Avoid tricks. Don't turn on your taillights or flash your brake lights. Follow the suggestions above.

SPACE TO THE SIDES

Commercial vehicles are often wide and take up most of a lane. Safe drivers will manage what little space they have. You can do this by keeping your vehicle centered in your lane, and avoid driving alongside others.

Staying Centered in a Lane. You need to keep your vehicle centered in the lane to keep safe clearance on either side. If your vehicle is wide, you have little room to spare.

Traveling Next to Others. There are two dangers in traveling alongside other vehicles:

- Another driver may change lanes suddenly and turn into you.
- You may be trapped when **you** need to change lanes.

Find an open spot where you aren't near other traffic. When traffic is heavy, it may be hard to find an open spot. If you must travel near other vehicles, try to keep as much space as possible between you and them. Also, drop back or pull forward so that you are sure the other driver can see you.

Strong Winds. Strong winds make it difficult to stay in your lane. The problem is usually worse for lighter vehicles. This problem can be especially bad coming

out of tunnels. Don't drive alongside others if you can avoid it.

SPACE OVERHEAD

Hitting overhead objects is a danger. Make sure you always have overhead clearance.

Don't assume that the heights posted at bridges and overpasses are correct. Re-paving or packed snow may have reduced the clearances since the heights were posted.

The weight of a cargo van changes its height. An empty van is higher than a loaded one. If you got under a bridge when you were loaded, that does not necessarily mean you can do it when you are empty.

If you doubt you have safe space to pass under an object, go slowly. If you aren't sure you can make it, take another route. Warnings are often posted on low bridges or underpasses, but sometimes they are not.

Some roads can cause a vehicle to tilt. There can be a problem clearing objects along the edge of the road, such as signs, trees or bridge supports. Where this is a problem, drive a little closer to the center of the road.

Before you back into an area, get out and look (G.O.A.L.) for overhanging objects, such as trees, branches, or electric wires. It's easy to miss seeing them while you are backing. (Also check for other hazards at the same time.)

SPACE BELOW

Many drivers forget about the space under their vehicles. That space can be very small when a vehicle is heavily loaded. Railroad tracks can stick up several inches. This is often a problem on dirt roads and in unpaved yards where the surface around the tracks can wear away. Don't take a chance on getting hung up halfway across. Drainage channels across roads can cause the end of some vehicles to drag. Cross such depressions carefully.

SPACE FOR TURNS

The space around a truck or bus is important in turns. Because of wide turning and offtracking, large vehicles can hit other vehicles or objects during turns.

Right Turns. Here are some rules to help prevent right-turn crashes:

- Turn slowly to give yourself and others more time to avoid problems.
- If you are driving a truck or bus that cannot make the right turn without swinging into another lane, turn wide as you **complete** the turn, as shown in Figure 2-8. Keep the rear of your vehicle close to the curb. This will stop other drivers from passing you on the right.
- Don't turn wide to the left as you start the turn, as shown in Figure 2-9. A following driver may think you are turning left and try to pass you on the right. You may crash into the other vehicle as you complete your turn.
- If you must cross into the oncoming lane to make a turn, watch out for vehicles coming toward you. Give them room to go by or to stop. However, don't back up for them, because you might hit someone behind you.

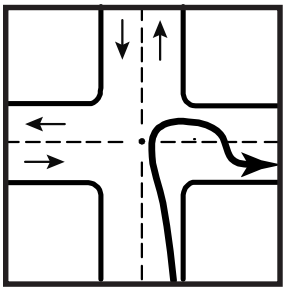

Figure 2-8
Do This

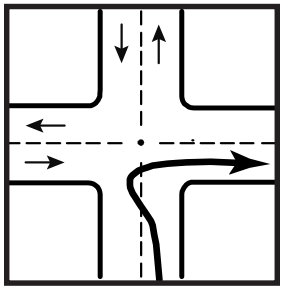

Figure 2-9
Don't Do This

Left Turns. On a left turn, make sure you have reached the center of the intersection before you start the left turn. If you turn too soon, the left side of your vehicle may hit another vehicle because of offtracking.

After you have completed your turn, move into the right most traffic lane when traffic is clear. See Figure 2-10 on page 2-17.

If there are two turning lanes, always take the right-hand turn lane, as shown in Figure 2-11 on page 2-17. Don't start in the inside lane because you may have to swing right to make the turn. Drivers on your left can be more readily seen.

SPACE NEEDED TO CROSS OR ENTER TRAFFIC

Be aware of the size and weight of your vehicle when you cross or enter traffic. Here are some important things to keep in mind:

- Because of slow acceleration and the space large vehicles require, you may need a much larger gap to enter traffic than you would in a car.
- Acceleration varies with the load. Allow more room if your vehicle is heavily loaded.
- Before you start across a road, make sure you can get all the way across before traffic reaches you.

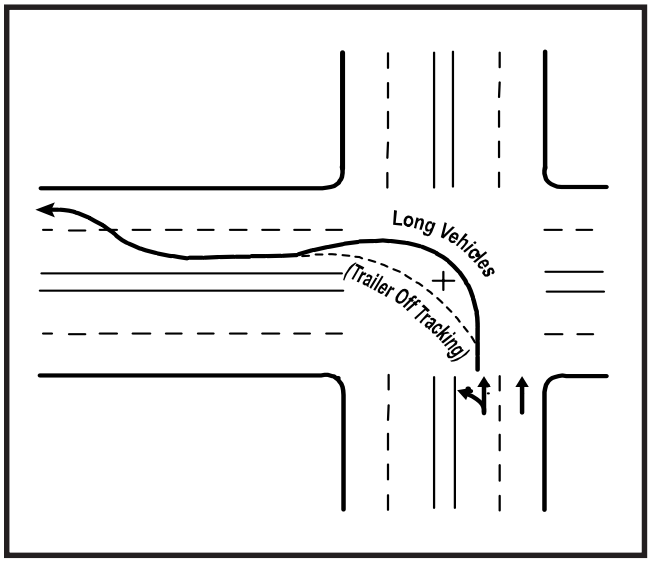

Figure 2-10

Turn into the lane closest to the lane from which you came. Allow for off tracking if your vehicle is long. Return to right-most traffic lane when safe and traffic permits. Don't return to the right lane at or near other intersections.

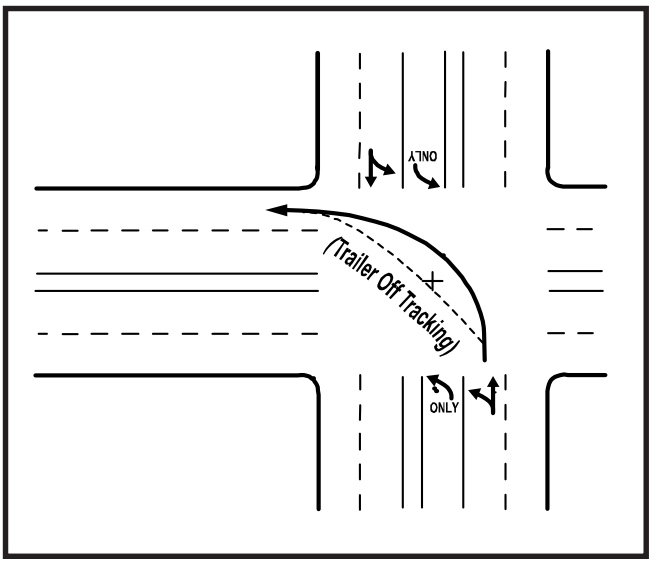

Figure 2-11

*If there are **two left turn lanes**, use the right-hand lane.*

Test Your Knowledge

1. How do you find out how many seconds of following distance space you have?
2. If you are driving a 30 foot vehicle at 55 m.p.h., how many seconds of following distance should you allow?
3. True or False? You should decrease your following distance if somebody is following you too closely.
4. True or False? If you swing wide to the left before turning right, another driver may try to pass you on the right.

These questions may be on your test. If you are unable to answer them all, re-read Section 2.7: Managing Space.

2.8 Driving at Night

IT'S MORE DANGEROUS

You are at greater risk when you drive at night. Drivers can't see hazards as soon as in daylight, so they have less time to respond. Drivers caught by surprise are less able to avoid a crash.

The problems of night driving involve the driver, the roadway, and the vehicle. We will discuss each of these factors.

DRIVER FACTORS

Vision. People can't see as sharply at night or in dim light. Also, their eyes need time to adjust to seeing in dim light. Most people have noticed this when walking into a dark movie theater.

Glare. Drivers can be blinded for a short time by bright light. It takes time to recover from this blindness. Older drivers are especially bothered by glare. Most people have been temporarily blinded by camera flash units or by the high beams of an oncoming vehicle. It can take several seconds to recover from glare. Even two seconds of glare blindness can be dangerous. A vehicle going 55 mph will travel more than half the distance of a football field during that time. Don't look directly at bright lights when driving. Look at the right side of the road. Watch the right lane or edge marking when someone coming toward you has very bright lights.

Fatigue and Lack of Alertness. Fatigue (being tired) and lack of alertness are bigger problems at night. The body's need for sleep is beyond a person's control. Most people are less alert at night, especially after midnight. This is particularly true if you have been driving for a long time. Drivers may not see hazards as soon or react as quickly, so the chance of a crash is greater. If you are sleepy, the only safe cure is to get off the road and get some sleep. If you don't, you risk your life and the lives of others.

ROADWAY FACTORS

Poor Lighting. In the daytime there is usually enough light to see well. This is not true at night. Some areas may have bright street lights, but many areas will have poor lighting. On most roads you will probably need to depend entirely on your headlights.

Less light means you will not be able to see hazards as well as in daytime. Road users who do not have lights are hard to see. There are many accidents at night involving pedestrians, joggers, bicyclists, and animals.

Even when there are lights, the road scene can be confusing. Traffic signals and hazards can be hard to see against a background of signs, shop windows, and other lights.

Drive slower when lighting is poor or confusing. Drive slowly enough to be sure you can stop in the distance you can see ahead.

Drunk Drivers. Drunk drivers and drivers under the influence of drugs are a hazard to themselves and to you. Be especially alert around the closing times for bars and taverns. Watch for drivers who have trouble staying in their lane or maintaining speed, stop without reason, or show other signs of being under the influence of alcohol or drugs.

VEHICLE FACTORS

Headlights. At night your headlights will usually be the main source of light for you to see and for others to see you. You can't see nearly as much with your headlights as you can see in the daytime. With low beams you can see ahead about 250 feet and with high beams about 350-500 feet. You must adjust your speed to keep your stopping distance within your sight distance. This means going slow enough to be able to stop within the range of your headlights. Otherwise, by the time you see a hazard, you will not have time to stop.

Night driving can be more dangerous if you have problems with your headlights. Dirty headlights may give only half the light they should. This cuts down your ability to see, and makes it harder for others to see you. Make sure your lights are clean and working. Headlights can be out of adjustment. If they don't point in the right direction, they won't give you a good view and they can blind other drivers. Have a qualified person make sure they are adjusted properly.

Other Lights. In order for you to be seen easily, the following must be clean and working properly:

- Reflectors.
- Marker lights.
- Clearance lights.
- Taillights.
- Identification lights.

Turn Signals and Brake Lights. At night your turn signals and brake lights are even more important for telling other drivers what you intend to do. Make sure you have clean, working turn signals and stop lights.

Windshield and Mirrors. It is more important at night than in the daytime to have a clean windshield and clean mirrors. Bright lights at night can cause dirt on your windshield or mirrors to create a glare of its own, blocking your view. Most people have experienced driving toward the sun just as it has risen or is about to set and found that they can barely see through a windshield that seemed to look okay in the middle of the day. Clean your windshield on the inside and outside for safe driving at night.

NIGHT DRIVING PROCEDURES

Pre-Trip Procedures. Make sure you are rested and alert. If you are drowsy, **sleep** before you drive! Even a nap can save your life or the lives of others. If you wear eye glasses, make sure they are clean and unscratched. Don't wear sun glasses at night. Do a complete pre-trip inspection of your vehicle. Pay attention to checking all lights and reflectors and cleaning those you can reach.

Avoid Blinding Others. Glare from your headlights can cause problems for drivers coming towards you. They can also bother drivers going in the same direction you are, when your lights shine in their rearview mirror. Dim your lights before they cause glare for other drivers. Dim your lights within 500 feet of an oncoming vehicle and when following another vehicle within 500 feet.

Avoid Glare from Oncoming Vehicles. Do not look directly at lights of oncoming vehicles. Look slightly to the right at a right lane or edge marking, if available. If other drivers don't put their low beams on, don't try to "get back at them" by putting your own high beams on. This increases glare for oncoming drivers and increases the chance of a crash.

Use High Beams When You Can. Some drivers make the mistake of always using low beams. This seriously cuts down on their ability to see ahead. Use high beams when it is safe and legal to do so. Use them when you are not within 500 feet of an approaching vehicle. Also, don't let the inside of your cab get too bright. This makes it harder to see outside. Keep the interior light off and adjust your instrument lights as low as you can and still be able to read the gauges.

If You Get Sleepy, Stop Driving at the Nearest Safe Place. People often don't realize how close they are to falling asleep even when their eyelids are falling shut. If you can safely do so, look at yourself in a mirror. If you look sleepy, or you just feel sleepy, **stop driving!** You are in a very dangerous condition. The only safe cure is to sleep.

2.9 Driving in Fog

The best advice for driving in fog is don't. It is preferrable that you pull off the road into a rest area or truck stop until visibility is better. If you must drive, be sure to consider the following:

- Obey all fog-related warning signs.
- Slow before you enter fog.
- Turn on all your lights. (Headlights should be on low beams.)
- Be prepared for emergency stops.

2.10 Driving in Winter

VEHICLE CHECKS

Make sure your vehicle is ready before driving in winter weather. You should make a regular pre-trip inspection, paying extra attention to the following items:

- **Coolant level and antifreeze amount.** Make sure the cooling system is full and there is enough anti-freeze in the system to protect against freezing. This can be checked with a special coolant tester.
- **Defrosting and heating equipment.** Make sure the defrosters work. They are needed for safe driving. Make sure the heater is working, and that you know how to operate it. If you use other heaters and expect to need them (e.g., mirror heaters, battery box heaters, fuel tank heaters), check their operation.
- **Wipers and washers.** Make sure the windshield wiper blades are in good condition. Make sure the wiper blades press against the window hard enough to wipe the windshield clean. Otherwise they may not sweep off snow properly. Make sure the windshield washer works and there is washing fluid in the washer reservoir.

  Use windshield washer antifreeze to prevent freezing of the washer fluid. If you can't see well enough while driving (for example, if your wipers fail), stop safely and fix the problem.
- **Tires.** Make sure you have enough tread on your tires. The drive tires must provide traction to push the rig over wet pavement and through snow. The steering tires must have traction to steer the vehicle. Enough tread is especially important in winter conditions. You must have at least 4/32 inch tread depth in every major groove on front tires and at least 2/32 inch on other tires. More would be better. Use a gauge to determine if you have enough tread for safe driving.
- **Tire chains**. You may find yourself in conditions where you can't drive without chains, even to get to a place of safety. Carry the right number of chains and extra cross links. Make sure they will fit your drive tires. Check the chains for broken hooks, worn or broken cross links, and bent or broken side chains. Learn how to put the chains on before you need to do it in snow and ice.
- **Lights and reflectors**. Make sure the lights and reflectors are clean. Lights and reflectors are especially important during bad weather. Check from time to time during bad weather to make sure they are clean and working right.
- **Windows and mirrors.** Remove any ice, snow, etc., from the windshield, windows, and mirrors before starting. Use a windshield scraper, snow brush, and windshield defroster as necessary.
- **Hand holds, steps, and deck plates.** Remove all ice and snow from hand holds, steps, and deck plates (cat walk) which you must use to enter the cab or to move about the vehicle. This will reduce the danger of slipping.
- **Radiator shutters and winterfront.** Remove ice from the radiator shutters. Make sure the winterfront is not closed too tightly. If the shutters freeze shut or the winterfront is closed too much, the engine may overheat and stop.
- **Exhaust system.** Exhaust system leaks are especially dangerous when cab ventilation may be poor (windows rolled up, etc.) Loose connections could permit poisonous carbon monoxide to leak into your vehicle. Carbon monoxide gas will cause you to be sleepy. In large enough amounts it can kill you. Check the exhaust system for loose parts and for sounds and signs of leaks.

DRIVING

Slippery Surfaces. Drive slowly and smoothly on slippery roads. If it is very slippery, you shouldn't drive at all. Stop at the first safe place.

The following are some safety guidelines:

- **Start gently and slowly.** When first starting, get the feel of the road. Don't hurry.
- **Adjust turning and braking to conditions.** Make turns as gentle as possible. Don't brake any harder than necessary, and don't use the engine brake or speed retarder. (They can cause the driving wheels to skid on slippery surfaces.)
- **Adjust speed to conditions.** Don't pass slower vehicles unless necessary. Go slow and watch far enough ahead to keep a steady speed. Avoid having to slow down and speed up. Take curves at slower

speeds and don't brake while in curves. Be aware that as the temperature rises to the point where ice begins to melt, the road becomes even more slippery. Slow down more.

- **Adjust space to conditions.** Don't drive alongside other vehicles. Keep a longer following distance. When you see a traffic jam ahead, slow down or stop to wait for it to clear. Try hard to anticipate stops early and slow down gradually.

- **Wet brakes.** When driving in heavy rain or deep standing water, your brakes will get wet. Water in the brakes can cause them to be weak, to apply unevenly, or to grab. This can cause lack of braking power, wheel lockups, pulling to one side or the other, and jackknife if you pull a trailer.

Avoid driving through deep puddles or flowing water if possible. If not, you should:

- Slow down.

- Place transmission in a low gear.

- Gently put on the brakes. This presses linings against brake drums or discs and keeps mud, silt, sand, and water from getting in.

- Increase engine RPM and cross the water while keeping light pressure on the brakes.

- When out of the water, maintain light pressure on the brakes for a short distance to heat them up and dry them out.

- Make a test stop when safe to do so. Check behind to make sure no one is following, then apply the brakes to be sure they work right. If not, dry out further as described above. (CAUTION: Do not apply too much brake pressure and accelerator at the same time or you can overheat brake drums and linings.)

2.11 Driving in Very Hot Weather

VEHICLE CHECKS

Tires. Check the tire mounting and air pressure. Inspect the tires every two hours or every 100 miles when driving in very hot weather. Air pressure increases with temperature. Do not let air out or the pressure will be too low when the tires cool off. If a tire is too hot to touch, remain stopped until it cools off. Otherwise the tire may blow out or catch fire.

Engine Oil. The engine oil helps keep the engine cool, as well as lubricating it. Make sure there is enough engine oil. If you have an oil temperature gauge, make sure the temperature is within the proper range while you are driving.

Engine Coolant. Before starting out, make sure the engine cooling system has enough water and antifreeze according to the engine manufacturer's directions. (Antifreeze helps the engine under hot conditions as well as cold conditions.) When driving, check the water temperature or coolant temperature gauge from time to time. Make sure that it remains in the normal range. If the gauge goes above the highest safe temperature, there may be something wrong that could lead to engine failure and possibly fire. Stop driving as soon as safely possible and try to find out what is wrong.

Some vehicles have sight glasses, see-through coolant overflow containers, or coolant recovery containers. These permit you to check the coolant level while the engine is hot. If the container is not part of the pressurized system, the cap can be safely removed and coolant added even when the engine is at operating temperature.

Never remove the radiator cap or any part of the pressurized system until the system has cooled. Steam and boiling water can spray under pressure and cause severe burns. If you can touch the radiator cap with your bare hand, it is probably cool enough to open.

If coolant has to be added to a system without a recovery tank or overflow tank, follow these steps:

- Shut the engine off.

- Wait until the engine has cooled.

- Protect your hands (use gloves or a thick cloth).

- Turn the radiator cap slowly to the first stop, which releases the pressure seal.

- Step back while the pressure is released from the cooling system.

- When all the pressure has been released, press down on the cap and turn it further to remove it.

- Visually check the level of coolant and add more coolant if necessary.

- Replace the cap and turn it all the way to the closed position.

Engine Belts. Learn how to check V-belt tightness on your vehicle by pressing on the belts. Loose belts will not turn the water pump and/or fan properly. This will result in overheating. Also, check belts for cracking or other signs of wear.

Hoses. Make sure coolant hoses are in good condition. A broken hose while driving can lead to engine failure and even fire.

DRIVING

Watch for Bleeding Tar. Tar in the road pavement frequently rises to the surface in very hot weather. Spots where tar "bleeds" to the surface are very slippery.

Go Slow Enough to Prevent Overheating. High speeds create more heat for tires and the engine. In desert conditions the heat may build up to the point where it is dangerous. The heat will increase chances of tire failure or even fire, and engine failure.

Test Your Knowledge

1. True or False? You should use low beams whenever you can.
2. What should you do before you drive if you are drowsy?
3. What effects can wet brakes cause? How can you avoid these problems?
4. True or False? You should let air out of hot tires so the pressure goes back to normal.
5. True or False? You can safely remove the radiator cap as long as the engine isn't overheated.

These questions may be on your test. If you are unable to answer them all, re-read Sections 2.8, 2.9, 2.10, and 2.11.

2.12 Railroad Crossings

Railroad crossings are always dangerous. Every such crossing must be approached with the expectation that a train is coming.

Double tracks require a double check. Remember that a train on one track may hide a train on the other track. Look both ways before crossing. After one train has cleared a crossing, be sure no other trains are near before starting across the tracks.

Yard areas and grade crossings in cities and towns are just as dangerous as rural grade crossings. Approach them with as much caution.

NEVER RACE A TRAIN TO A CROSSING

Never attempt to race a train to a crossing. It is extremely difficult to judge the speed of an approaching train.

REDUCE SPEED

Speed must be reduced in accordance with your ability to see approaching trains in any direction, and speed must be held to a point which will permit you to stop short of the tracks in case a stop is necessary.

DON'T EXPECT TO HEAR A TRAIN

Because of noise in the cab, you cannot expect to hear the train horn until the train is dangerously close to the crossing.

DON'T RELY ON SIGNALS

You should not rely solely upon the presence of warning signals, gates, or flagmen to warn of the approach of trains.

STOP REQUIREMENTS

A full-stop is required at grade crossings whenever:

- The nature of the cargo makes a stop mandatory under state or federal regulations.
- Such a stop is otherwise required by law.

CROSSING THE TRACKS

Railroad crossings with steep approaches can cause your unit to hang up on the tracks.

Never permit traffic conditions to trap you in a position where you have to stop on the tracks. Be sure you can get all the way across the tracks before you start across.

Do not shift gears while crossing railroad tracks.

2.13 Mountain Driving

In mountain driving, gravity plays a major role. On any upgrade, gravity slows you down. The steeper the grade, the longer the grade, and/or the heavier the load—the more you will need to use lower gears to climb hills or mountains. In coming down long, steep downgrades, gravity causes the speed of your vehicle to increase. You must select an appropriate safe speed, then use a low gear, and use proper braking techniques. You should plan ahead and obtain information about any long steep grades along your planned route of travel. If possible, talk to other drivers who are familiar with the grades to find out what speeds are safe.

You must go slow enough so your brakes can hold you back without getting too hot. If the brakes become too hot, they may start to "fade." This means you have to apply them harder and harder to get the same stopping power. If you continue to use the brakes hard, they can keep fading until you cannot slow down or stop at all.

SELECT A "SAFE" SPEED

Your most important consideration is to select a speed that is not too fast for the:

- Total weight of the vehicle and cargo.
- Length of the grade.
- Steepness of the grade.
- Road conditions.
- Weather.

If a speed limit is posted, or there is a sign indicating "Maximum Safe Speed," never exceed the speed shown. Also, look for and heed warning signs indicating the length and steepness of the grade.

You must use the braking effect of the engine as the principal way of controlling your speed. The braking effect of the engine is greatest when it is near the governed RPMs and the transmission is in the lower gears. Save your brakes so you will be able to slow or stop as required by road and traffic conditions.

BE IN THE RIGHT GEAR BEFORE STARTING DOWN THE GRADE

Shift the transmission to a gear based on the steepness of the grade, weather, road conditions and your load before starting down the grade. Do not try to downshift after your speed has already built up. You will not be able to shift into a lower gear. You may not even be able to get back into any gear and all engine braking effect will be lost. Forcing an automatic transmission into a lower gear at high speed could damage the transmission and also lead to loss of all engine braking effect.

Brakes are designed so brake shoes or pads rub against the brake drum or disks to slow the vehicle. Braking creates heat, but brakes are designed to take a lot of heat. However, brakes can fade or fail from excessive heat caused by using them too much and not relying on the engine braking effect.

BRAKE FADING OR FAILURE

Brake fade is also affected by adjustment. To safely control a vehicle, every brake must do its share of the work. Brakes out of adjustment will stop doing their share before those that are in adjustment. The other brakes can then overheat and fade, and there will not be enough braking available to control the vehicle. Brakes can get out of adjustment quickly, especially when they are used a lot; also, brake linings wear faster when they are hot. Therefore, brake adjustment must be checked frequently.

PROPER BRAKING TECHNIQUE

Remember: The use of brakes on a long and/or steep downgrade is only a supplement to the braking effect of the engine. Once the vehicle is in the proper low gear, the following is a proper braking technique:

1. Apply the brakes just hard enough to feel a definite slowdown.
2. When your speed has been reduced to approximately 5 mph below your "safe" speed, release the brakes. [This brake application should last for about three (3) seconds.]
3. When your speed has increased to your "safe" speed, repeat steps 1 and 2.

For example, if your "safe" speed is 40 mph, you would not apply the brakes until your speed reaches 40 mph. You now apply the brakes hard enough to gradually reduce your speed to 35 mph and then release the brakes. Repeat this as often as necessary until you have reached the end of the downgrade.

ESCAPE RAMPS

Escape ramps have been built on many steep mountain downgrades. They are made to stop runaway vehicles safely without injuring drivers and passengers. Escape ramps use a long bed of loose soft material to slow a runaway vehicle, sometimes in combination with an upgrade.

Know escape ramp locations on your route. Signs show drivers where ramps are located. Escape ramps save lives, equipment, and cargo. Use them if you lose your brakes.

2.14 Seeing Hazards

IMPORTANCE OF SEEING HAZARDS

What Constitutes a Hazard? A hazard is any road condition or other road user (driver, bicyclist, pedestrian) that is a possible danger. For example, a car in front of you is headed towards the freeway exit, but his brake lights come on and he begins braking hard. This could mean the driver is uncertain about taking the offramp. He might suddenly return to the highway. This car is a **hazard**. If the driver of the car cuts in front of you, it is no longer just a hazard; it is an emergency.

Seeing Hazards Lets You Be Prepared. You will have more time to act if you see hazards before they become emergencies. In the example above, you might make a lane change or slow down to prevent a crash if the car suddenly cuts in front of you. Seeing this hazard gives you time to check your mirrors and signal a lane change. Being prepared reduces the danger. A driver who did not see the hazard until the slow car pulled back on the highway in front of him would have to do something very suddenly. Sudden braking or a quick lane change is much more likely to lead to a crash.

Learning to See Hazards. There are often clues that will help you see hazards. The more you drive, the better you can get at seeing hazards. This section will talk about hazards that you should be aware of.

HAZARDOUS ROADS

Slow down and be very careful if you see any of the following road hazards:

- **Work zones.** When people are working on the road, it is a hazard. There may be narrower lanes, sharp turns, or uneven surfaces. Other drivers are often distracted and drive unsafely. Workers and construction vehicles may get in the way. Drive slowly and carefully near work zones. Use your 4-way flashers or brake lights to warn drivers behind you.

- **Drop off.** Sometimes the pavement drops off sharply near the edge of the road. Driving too near the edge can tilt your vehicle toward the side of the road. This can cause the top of your vehicle to hit roadside objects (signs, tree limbs). Also, it can be hard to steer as you cross the drop off, going off the road, or coming back on.

- **Foreign objects.** Things that have fallen on the road can be hazards. They can be a danger to your tires and wheel rims. They can damage electrical and brake lines. They can be caught between dual tires and cause severe damage. Some obstacles which appear to be harmless can be very dangerous. For example, cardboard boxes may be empty, but they may also contain some solid or heavy material capable of causing damage. The same is true of paper and cloth sacks. It is important to remain alert for objects of all sorts, so you can see them early enough to avoid them without making sudden, unsafe moves.

- **Off-ramps/on-ramps.** Freeway and turnpike exits can be particularly dangerous for commercial vehicles. Off-ramps and on-ramps often have speed limit signs posted. Remember, these speeds may be safe for automobiles, **but may not be safe for larger vehicles or heavily loaded vehicles**. Exits which go downhill and turn at the same time can be especially dangerous. The downgrade makes it difficult to reduce speed. Braking and turning at the same time can be a dangerous practice. Make sure you are going slow enough before you get on the curved part of an off-ramp or on-ramp.

DRIVERS WHO ARE HAZARDS

In order to protect yourself and others, you must know when other drivers may do something hazardous. Some clues to this type of hazard are discussed below:

- **Blocked vision.** People who can't see others are a very dangerous hazard. Be alert for drivers whose vision is blocked. Vans, loaded station wagons, and cars with the rear window blocked are examples. Rental trucks should be watched carefully. Their drivers are often not used to the limited vision they have to the sides and rear of the truck. In winter, vehicles with frosted, ice covered, or snow covered windows are hazards.

  Vehicles may be partly hidden by blind intersections or alleys. If you can only see the rear or front end of a vehicle but not the driver, then he or she can't see you. Be alert because he/she may back out or enter into your lane. Always be prepared to stop.

  Delivery trucks can present a hazard. The driver's vision is often blocked by packages, or vehicle doors. Drivers of step vans, postal vehicles, and local delivery vehicles often are in a hurry and may suddenly step out of their vehicle or drive their vehicle into the traffic lane.

  Parked vehicles can be hazards, when the people start to get out. Or, they may suddenly start up and drive into your way. Watch for movement inside the vehicle or movement of the vehicle itself that shows people are inside. Watch for brake lights or backup lights, exhaust, and other clues that a driver is about to move.

  Be careful of a stopped bus. Passengers may cross in front of or behind the bus, and they often can't see you.

  Pedestrians and bicyclists can also be hazards. Walkers, joggers, and bicyclists may be on the road with their back to the traffic, so they can't see you. Sometimes, they wear portable stereos with head sets, so they can't hear you either. This can be dangerous. On rainy days, pedestrians may not see you because of hats or umbrellas. They may be hurrying to get out of the rain and may not pay attention to traffic.

- **Distractions.** People who are distracted are hazards. Watch for where they are looking. If they are looking elsewhere, they can't see you. But be alert even when they are looking at you. They may believe that they have the right of way.

- **Children.** Children tend to act quickly without checking traffic. Children playing with one another may not look for traffic and are a serious hazard.

- **Talkers.** Drivers or pedestrians talking to one another may not be paying close attention to the traffic.

- **Workers.** People working on or near the roadway are a hazard clue. The work creates a distraction for other drivers and the workers themselves may not see you.

- **Ice cream truck.** Someone selling ice cream is a hazard clue. Children may be nearby and may not see you.

- **Disabled vehicle.** Drivers changing a tire or fixing an engine often do not pay attention to the danger that roadway traffic is to them. They are often careless. Jacked up wheels or raised hoods are hazard clues.

- **Accidents.** Accidents are particularly hazardous. People involved in the accident may not look for traffic. Passing drivers tend to look at the accident. People often run across the road without looking. Vehicles may slow or stop suddenly.

- **Shoppers.** People in and around shopping areas are often not watching traffic because they are looking for stores or looking into store windows.

- **Confused drivers.** Confused drivers often change direction suddenly or stop without warning. Confusion is common near freeway or turnpike interchanges and major intersections. Tourists unfamiliar with the area can be very hazardous. Clues to tourists include car-top luggage and out-of-state license plates. Unexpected actions (stopping in the middle of a block, changing lanes for no apparent reason, backup lights suddenly going on) are clues to confusion. Hesitation is another clue, including driving very slowly, using brakes often, or stopping in the middle of an intersection. You may also see drivers who are looking at street signs, maps, and house numbers. These drivers may not be paying attention to you.

- **Slow drivers.** Motorists who fail to maintain normal speed are hazards. Seeing slow moving vehicles early can prevent a crash. Some vehicles, by their nature, are slow and seeing them is a hazard clue (mopeds, farm machinery, construction machinery, tractors, etc.) Some of these will have the "slow moving vehicle" symbol to warn you. This is a red triangle with an orange center. Watch for it.

  Drivers signaling a turn may be a hazard. They may slow more than expected or stop. If they are making a tight turn into an alley or driveway, they may go very slow. If they are blocked by pedestrians or other vehicles, they may need to stop on the roadway. Vehicles turning left may need to stop for oncoming vehicles.

- **Drivers in a hurry.** Drivers may feel your commercial vehicle is preventing them from getting where they want to go on time. Such drivers may pass you without a safe gap in the oncoming traffic, cutting too close in front of you. Drivers entering the road may pull in front of you in order to avoid being stuck behind you, causing you to brake. Be aware of this and watch for drivers who are in a hurry.

- **Impaired drivers.** Drivers who are sleepy, have had too much to drink, are on drugs, or who are ill are hazards. Some clues to these drivers are:

  - Weaving across the road or drifting from one side to another.
  - Leaving the road (dropping right wheels onto the shoulder, or bumping across a curb in a turn).
  - Stopping at the wrong time (stopping at a green light, or waiting too long at a stop sign).
  - An open window in cold weather.
  - Speeds up or slows down suddenly, driving too fast or too slow.

  Be especially alert for drunk drivers and sleepy drivers late at night.

Driver Body Movement As A Clue. Drivers look in the direction they are going to turn. You may sometimes get a clue from a driver's head and body movements that the driver may be going to make a turn even though the turn signals aren't on. Drivers making over-the-shoulder checks may be going to change lanes. These clues are most easily seen in motorcyclists and bicyclists. Watch other road users and try to tell whether they might do something hazardous.

Conflicts. You are in conflict when you need to change speed and/or direction to avoid hitting someone. Conflicts occur at intersections where vehicles meet, at merges (such as turnpike on-ramps) and where there are needed lane changes (such as the end of a lane, forcing a move to another lane of traffic). Other situations include slow moving or a stalled vehicle in a traffic lane, and accident scenes. Watch for other drivers who are in conflict because they are a hazard to you. When they react to this conflict, they may do something that will put them in conflict with you.

ALWAYS HAVE A PLAN

You should always be looking for hazards. Continue to learn to see hazards on the road. However, don't forget why you are looking for the hazards - they may turn into **emergencies**. You look for the hazards in order to have time to **plan a way out of any emergency**. When you see a hazard, think about the emergencies that could develop and figure out what you would do. Always be prepared to take action based on your plans. In this way, you will be a prepared, defensive driver who will improve not only your own safety but the safety of all road users.

Test Your Knowledge

1. What factors determine your selection of a "safe" speed when going down a long, steep downgrade?
2. Why should you be in the proper gear **before** starting down a hill?
3. Describe the proper braking technique when going down a long, steep downgrade.
4. What is a hazard?
5. Why make emergency plans when you see a hazard?

These questions may be on your test. If you are unable to answer them all, re-read Sections 2.12, 2.13, and 2.14.

2.15 Emergencies

Traffic emergencies occur when two vehicles are about to collide. Vehicle emergencies occur when tires, brakes, or other critical parts fail. Following the safety practices in this manual can help prevent emergencies. But if an emergency does happen, your chances of avoiding a crash depend upon how well you take action. Actions you can take are discussed below.

STEERING TO AVOID A CRASH

Stopping is not always the safest thing to do in an emergency. When you do not have enough room to stop, you may need to steer away from what's ahead. Remember, you can almost always turn to miss an obstacle more quickly than you can stop. However, top-heavy vehicles and tractors with multiple trailers may flip over.

Keep Both Hands on the Steering Wheel. In order to turn quickly, you must have a firm grip on the steering wheel with both hands. The best way to have both hands on the wheel, if there is an emergency, is to keep them there all the time.

How to Turn Quickly and Safely. A quick turn can be made safely, if it's done the right way. Here are some points that safe drivers use:

- **Do not** apply the brake while you are turning. It's very easy to lock your wheels while turning. If that happens, you may skid out of control.
- **Do not** turn any more than needed to clear whatever is in your way. The more sharply you turn, the greater the chances of a skid or rollover.
- Be prepared to "countersteer," that is, to turn the wheel back in the other direction, once you've passed whatever was in your path. Unless you are prepared to countersteer, you won't be able to do it quickly enough. You should think of emergency steering and countersteering as two parts of one driving action.

Where to Steer. If an oncoming driver has drifted into your lane, a move to your right is best. If that driver realizes what has happened, the natural response will be to return to his or her own lane.

If something is blocking your path, the best direction to steer will depend on the situation.

- If you have been using your mirrors, you'll know which lane is empty and can be safely used.
- If the shoulder is clear, going right may be best. No one is likely to be driving on the shoulder but someone may be passing you on the left. You will know if you have been using your mirrors.
- If you are blocked on both sides, a move to the right may be best. At least you won't force anyone into an opposing traffic lane, possibly resulting in a head-on collision.

Leaving the Road. In some emergencies, you may have to drive off the road. It may be less risky than facing a collision with another vehicle.

Most shoulders are strong enough to support the weight of a large vehicle and, therefore, offer an available escape route. Here are some guidelines, if you do leave the road:

- **Avoid braking.** If possible, avoid using the brakes until your speed has dropped to about 20 mph. Then brake very gently to avoid skidding on a loose surface.
- **Keep one set of wheels on the pavement if possible.** This helps to maintain control.
- **Stay on the shoulder.** If the shoulder is clear, stay on it until your vehicle has come to a stop. Signal and check your mirrors before pulling back onto the road.

Returning to the Road. If you are forced to return to the road before you can stop, use the following procedure:

- **Hold the wheel tightly.** Turn sharply enough to get right back on the road safely. Don't try to edge gradually back on the road. If you do, your tires might grab unexpectedly and you could lose control.
- When both front tires are on the paved surface, **countersteer** immediately. The two turns should be made as a single "steer-countersteer" move.

HOW TO STOP QUICKLY AND SAFELY

If somebody suddenly pulls out in front of you, your natural response is to hit the brakes. This is a good response if there's enough distance to stop and you use the brakes correctly.

You should brake in a way that will keep your vehicle in a straight line and allow you to turn if it becomes necessary. You can use the "controlled braking" method or the "stab braking" method.

Controlled Braking. With this method, you apply the brakes as hard as you can **without** locking the wheels. Keep steering wheel movements very small while doing this. If you need to make a larger steering adjustment or if the wheels lock, release the brakes. Re-apply the brakes as soon as you can.

Stab Braking.

- Apply your brakes all the way.

- Release the brakes when your wheels lock up.

- As soon as the wheels start rolling, apply the brakes fully again. (It can take up to one second for the wheels to start rolling after you release the brakes. If you re-apply the brakes before the wheels start rolling, the vehicle won't straighten out.)

Don't Jam on the Brakes. Emergency braking does not mean pushing down on the brake pedal as hard as you can. That will only keep the wheels locked up and cause a skid. If the wheels are skidding, you cannot control the vehicle.

> **Note:** If you drive a vehicle with anti-lock brakes, you should read and follow the directions found in the Vehicle Owners Manual for stopping quickly.

BRAKE FAILURE

Brakes kept in good condition rarely fail. Most hydraulic brake failures occur for one of two reasons:

- Loss of hydraulic pressure.

- Brake fade on long downgrades.

(Air brakes are discussed in Section 5.)

- **Loss of hydraulic pressure.** When the system won't build up pressure, the brake pedal will feel spongy or go to the floor. Here are some things you can do:
  - **Downshift.** Putting the vehicle into a lower gear will help to slow the vehicle.
  - **Pump the brakes.** Sometimes pumping the brake pedal will generate enough hydraulic pressure to stop the vehicle.
  - **Use the parking brake.** The parking or emergency brake is separate from the hydraulic brake system. Therefore, it can be used to slow the vehicle. However, be sure to press the release button or pull the release lever at the same time you use the emergency brake so you can adjust the brake pressure and keep the wheels from locking up.
  - **Find an escape route.** While slowing the vehicle, look for an escape route - an open field, side street, or escape ramp. Turning uphill is a good way to slow and stop the vehicle. Make sure the vehicle does not start rolling backward after you stop. Put it in low gear, apply the parking brake, and, if necessary, roll back into some obstacle that will stop the vehicle.

- **Brake failure on downgrades.** Going slow enough, selecting the proper gear and braking properly will almost always prevent brake failure on long downgrades. Once the brakes have failed; however, you are going to have to look outside your vehicle for something to stop it.

  Your best hope is an **escape ramp**. If there is one, there'll be signs telling you about it. Use it. Excape ramps are usually located a few miles from the top of the downgrade. Every year, hundreds of drivers avoid injury to themselves or damage to their vehicles by using escape ramps. Some escape ramps use soft gravel that resists the motion of the vehicle and brings it to a stop. Others turn uphill, using the hill to stop the vehicle and soft gravel to hold it in place.

  Any driver who loses brakes going downhill should use an escape ramp if it's available. If you don't use it, your chances of having a serious crash may be much greater.

  If no escape ramp is available, take the least hazardous escape route you can - such as an open field or a side road that flattens out or turns uphill. Make the move as soon as you know your brakes are not working. The longer you wait, the faster the vehicle will go and the harder it will be to stop.

TIRE FAILURE

Recognize Tire Failure. Quickly knowing you have a tire failure will let you have more time to react. Having just a few seconds to remember what it is you're supposed to do can help you. The major signs of tire failure are:

- **Sound.** The loud "bang" of a blowout is an easily recognized sign. Because it can take a few seconds for your vehicle to react, you might think it was some other vehicle. But any time you hear a tire blow, you'd be safest to assume it was yours.

- **Vibration.** If the vehicle thumps or vibrates heavily, it may be a sign that one of the tires has gone flat. With a rear tire, that may be the only sign you get.

- **Feel.** If the steering feels "heavy," it is probably a sign that one of the front tires has failed. Sometimes, failure of a rear tire will cause the vehicle to slide back and forth or "fishtail." However, dual rear tires usually prevent this.

Any of these signs is a warning of possible tire failure. You should do the following things:

- **Hold the steering wheel firmly.** If a front tire fails, it can twist the steering wheel out of your hands. The only way to prevent this is to keep a firm grip on the steering wheel with both hands at all times.

- **Stay off the brake.** It's natural to want to brake in an emergency. However, braking when a tire has failed could cause loss of control. Unless you're about to run into something, stay off the brake until the vehicle has slowed down. Then brake very gently, pull off the road, and stop.

- **Check the tires.** After you've come to a stop, get out and check all the tires. Do this even if the vehicle seems to be handling all right. If one of your dual tires goes, the only way you may know it is by getting out and looking at it.

2.16 Skid Control and Recovery

A skid happens whenever the tires lose their grip on the road. This is caused in one of four ways:

- **Over-braking.** Braking too hard and locking up the wheels. Skids can also occur when using the speed retarder when the road is slippery.
- **Over-steering.** Turning the wheels more sharply than the vehicle can turn.
- **Over-acceleration.** Supplying too much power to the drive wheels, causing them to spin.
- **Driving too fast.** Most serious skids result from driving too fast for road conditions. Drivers who adjust their driving to conditions don't over-accelerate and don't have to over-brake or over-steer from too much speed.

DRIVE-WHEEL SKIDS

By far the most common skid is one in which the rear wheels lose traction through excessive braking or acceleration. Skids caused by acceleration usually happen on ice or snow. They can be easily stopped by taking your foot off the accelerator. (If it is very slippery, push the clutch in. Otherwise, the engine can keep the wheels from rolling freely and regaining traction.)

Rear wheel braking skids occur when the rear drive wheels lock. Because locked wheels have less traction than rolling wheels, the rear wheels usually slide sideways in an attempt to catch up with the front wheels. In a bus or straight truck, the vehicle will slide sideways in a spin out. With vehicles towing trailers, a drive-wheel skid can let the trailer push the towing vehicle sideways, causing a sudden jackknife. (Figure 2-12)

CORRECTING A DRIVE-WHEEL BRAKING SKID

Do the following to correct a drive-wheel braking skid:

- **Stop braking.** This will let the rear wheels roll again, and keep the rear wheels from sliding any further. If on ice, push in the clutch to let the wheels turn freely.
- **Turn quickly.** When a vehicle begins to slide sideways, quickly steer in the direction you want the vehicle to go - down the road. You must turn the wheel quickly.
- **Countersteer.** As a vehicle turns back on course, it has a tendency to keep right on turning. Unless you turn the steering wheel quickly the other way, you may find yourself sliding in the opposite direction.

  Learning to stay off the brake, turn the steering wheel quickly, push in the clutch, and counter-steer in a skid takes a lot of practice. The best place to get this practice is on a large driving range or "skid pad."

Front-Wheel Skids

Most front-wheel skids are caused by driving too fast for conditions. Other causes are lack of tread on the front tires, and cargo loaded so not enough weight is on the front axle. In a front-wheel skid, the front end tends to go in a straight line regardless of how much you turn the steering wheel. On a very slippery surface, you may not be able to steer around a curve or turn.

When a front-wheel skid occurs, the only way to stop the skid is to let the vehicle slow down. Stop turning and/or braking so hard. Slow down as quickly as possible without skidding.

Figure 2-12 Tractor Jackknife

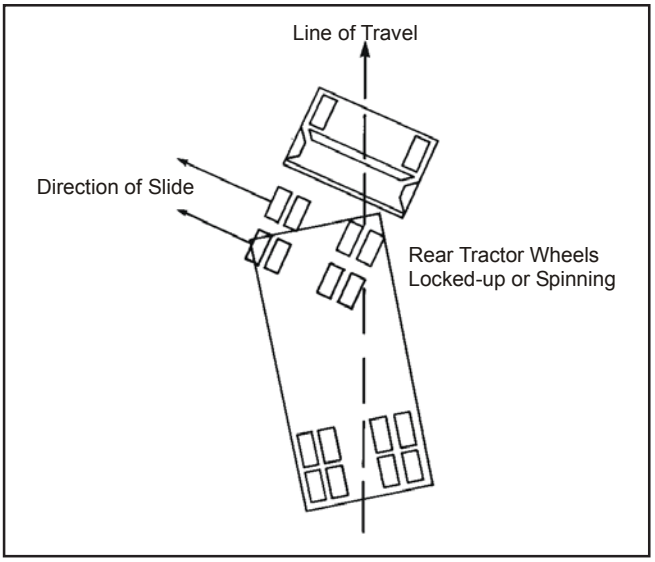

Test Your Knowledge

1. True or False? Stopping is not always the safest thing to do in an emergency.
2. What are some advantages of going right instead of left around an obstacle?
3. What is an "escape ramp?"
4. True or False? If a tire blows out, you should put the brakes on hard to stop quickly.

These questions may be on your test. If you are unable to answer them all, re-read Sections 2.15 and 2.16.

2.17 Accident Procedures

When you're in an accident and not seriously hurt, you need to act to prevent further damage or injury. The basic steps to be taken at any accident are to:

- Protect the area.
- Notify authorities.
- Care for the injured.

PROTECT THE AREA

The first thing to do at an accident scene is to keep another accident from happening at the same spot. To protect the accident area:

- If your vehicle is involved in the accident, try to get it to the side of the road. This will help prevent another accident and allow traffic to move.
- If you're stopping to help, park away from the accident. The area immediately around the accident will be needed for emergency vehicles.
- Put on your flashers.
- Set out reflective triangles to warn other traffic. Make sure they can be seen by other drivers in time for them to avoid the accident.

NOTIFY AUTHORITIES - CB OR PHONE (DIAL 911)

If you have a CB, put out a call over the emergency channel before you get out of your vehicle. If not, wait until after the accident scene has been properly protected, then phone or send someone to phone the police. Try to determine where you are so you can give the exact location.

CARE FOR THE INJURED

If a qualified person is at the accident and helping the injured, stay out of the way unless asked to assist. Otherwise, do the best you can to help any injured parties. Here are some basic steps to follow in giving assistance:

- Don't move a severely injured person unless the danger of fire or passing traffic makes it necessary.
- Stop heavy bleeding by applying direct pressure to the wound.
- Keep the injured person warm.

2.18 Fires

CAUSES OF FIRE

The following are some causes of vehicle fires:

- **After accidents.** Spilled fuel, improper use of flares.
- **Tires.** Under-inflated tires and duals that touch.
- **Electrical system.** Short circuits due to damaged insulation, loose connections.
- **Fuel.** Driver smoking, improper fueling, loose fuel connections.
- **Cargo.** Flammable cargo, improperly sealed or loaded, poor ventilation.

FIRE PREVENTION

Pay attention to the following:

- **Pre-trip inspection.** Make a complete inspection of the electrical, fuel, and exhaust systems, tires, and cargo. Be sure to check that the fire extinguisher is charged.
- **En route inspection.** Check the tires, wheels, and truck body for signs of heat whenever you stop during a trip.
- **Follow safe procedures.** Follow correct safety procedures for fueling the vehicle, (stay with the vehicle and watch the nozzle while fueling to prevent spills), using brakes, handling flares, and other activities that can cause a fire.
- **Monitoring.** Check the instruments and gauges often for signs of overheating and use the mirrors to look for signs of smoke from tires on the vehicle.
- **Use caution.** Use normal caution in handling anything flammable.

FIRE FIGHTING

Knowing how to fight fires is important. Fires have been made worse by drivers who didn't know what to do. Know how the fire extinguisher works. Study the instructions printed on the extinguisher before you need it. Here are some procedures to follow in case of fire:

- **Pull off the road.** The first step is to get the vehicle off the road and stop. In doing so:
  - Park in an open area, away from buildings, trees, brush, other vehicles, or anything that might catch fire.
  - Don't pull into a service station!
  - Notify emergency services of your problem and your location.
- **Keep the fire from spreading.** Before trying to put out the fire, make sure that it doesn't spread any further.

With an **engine** fire, turn off the engine as soon as you can. Don't open the hood if you can avoid it. Shoot extinguishers through louvers, radiator, or from the underside of the vehicle.

For a **cargo** fire in a van or box trailer, keep the doors shut, especially if your cargo contains hazardous materials. Opening the van doors will supply the fire with oxygen and can cause it to burn very fast.

- **Use the right fire extinguisher.**

  The B:C type fire extinguisher is designed to work on electrical fires and burning liquids. The A:B:C type is designed to work on burning wood, paper, and cloth as well.

  Water can be used on wood, paper, or cloth, but don't use water on an electrical fire (you could get shocked) or a gasoline fire (it will just spread the flames).

  A burning tire must be cooled. Lots of water may be required.

  If you're not sure what to use, especially on a hazardous materials fire, wait for qualified firefighters.

- **Extinguish the fire.** Here are some rules to follow in putting out a fire:
  - Only try to extinguish a fire if you know what you are doing and it is safe to do so.
  - When using the extinguisher, stay as far away from the fire as possible.
  - Aim at the source or base of the fire, not up in the flames.
  - Position yourself upwind. Let the wind carry the extinguisher to the fire rather than carrying the flames to you.
  - Continue until whatever was burning has been cooled. Absence of smoke or flame does not mean the fire is completely out or cannot restart.

Test Your Knowledge
1. What are some things to do at an accident scene to prevent another accident? 2. Name two causes of tire fires. 3. What kinds of fires is a B:C extinguisher **not** good for? 4. When using your extinguisher, should you get as close as possible to the fire? 5. Name some causes of vehicle fires.
These questions may be on your test. If you are unable to answer them all, re-read Sections 2.17 and 2.18

2.19 Staying Alert and Fit to Drive

BE READY TO DRIVE

Get Enough Sleep. Leaving on a long trip when you're already tired is dangerous. If you have a long trip scheduled, make sure you get enough sleep before you go. Most people require 7 to 8 hours of sleep every 24 hours.

Schedule Trips Safely. Your body gets used to sleeping during certain hours. If you are driving during those hours, you will be less alert. If possible, try to schedule trips for the hours you are normally awake. Many heavy motor vehicle accidents occur between midnight and 6 a.m. Tired drivers can easily fall asleep at these times, especially if they don't regularly drive at those hours. Trying to push on and finish a long trip at these times can be very dangerous.

Avoid Medication. Many medicines can make you sleepy. Those that do have a label warning against operating vehicles or machinery. The most common medicine of this type is an ordinary cold pill. If you need to drive with a cold, you are better off suffering from the cold than from the effects of the medicine.

Keep Cool. A hot, poorly ventilated cab can make you sleepy. Keep the window or vent cracked or use the air conditioner, if you have one.

Take Breaks. Short breaks can help keep you alert. But the time to take them is **before** you feel really drowsy or tired. Stop often. Walk around and inspect your vehicle. It may help to do some physical exercises.

WHEN YOU DO BECOME SLEEPY

When you are sleepy, trying to "push on" is far more dangerous than most drivers think. It is a **major cause of fatal accidents**. Here are some important rules to follow:

- **Stop to sleep.** When your body needs sleep, sleep is the only thing that will work. If you need to make

a stop anyway, make it whenever you feel the first signs of sleepiness, even if it is earlier than you planned. By getting up a little earlier the next day, you can keep on schedule without the danger of driving while you are not alert.

- **Take a nap.** If you can't stop for the night, at least pull off at a safe place, such as a rest area or truck stop, and take a nap. A nap as short as a half-hour will do more to overcome fatigue than a half-hour coffee stop.

- **Avoid drugs.** There are no drugs that can overcome being tired. While they may help to keep you awake for a while, they won't make you alert. And eventually, you'll be even more tired than if you hadn't taken them at all. Sleep is the only thing that can overcome fatigue.

ALCOHOL AND DRIVING

Drinking alcohol and then driving is a very serious problem. People who drink alcohol are involved in traffic accidents resulting in over 20,000 deaths every year. You should know:

- How it affects driving.
- Laws regarding drinking and driving.
- The legal, financial, and safety risks of drinking and driving.

The Truth About Alcohol. There are many dangerous ideas about the use of alcohol. The driver who believes in these wrong ideas will be more likely to get into trouble. Here are some examples:

FALSE	THE TRUTH
Alcohol increases your ability to drive.	Alcohol is a drug that will make you less alert and reduce your ability to drive safely.
Some people can drink a lot and not be affected.	Everyone who drinks is affected by alcohol.
If you eat a lot first, you won't get drunk.	Food will not keep you from getting drunk.
Coffee and a little fresh air will help a drinker sober up.	Only time will help a drinker sober up - other methods just don't work.
Stick with beer - it's not as strong as wine or whiskey.	A few beers are the same as a few shots of whiskey or a few glasses of wine.

What is a Drink? It is the alcohol in drinks that affects human performance. It doesn't make any difference whether that alcohol comes from "a couple of beers" or from two glasses of wine or two shots of hard liquor.

All of the following drinks **contain the same amount of alcohol**:

- A 12 ounce glass of 5% beer.
- A 5 ounce glass of 12% wine.
- A 1½ ounce shot of 80 proof liquor.

How Alcohol Works. Alcohol goes directly from the stomach into the blood stream. A drinker can control the amount of alcohol which he or she takes in, by having fewer drinks or none. However, the drinker cannot control how fast the body gets rid of alcohol. If you have drinks faster than the body can get rid of them, you will have more alcohol in your body and your driving will be more affected. The amount of alcohol in your body is commonly measured by the Blood Alcohol Concentration (BAC).

What Determines Blood Alcohol Concentration. BAC is determined by the amount of alcohol you drink (more alcohol means higher BAC), how fast you drink (faster drinking means higher BAC), and your weight (a small person doesn't have to drink as much as a larger person to reach the same BAC).

If a police or traffic officer asks you to take an Alcohol Concentration test, you must do so. If you refuse to take it, you will lose your driver license for one year.

Alcohol and the Brain. Alcohol affects more and more of the brain as BAC builds up. The first part of the brain affected controls judgement and self-control. One of the bad things about this is it can keep drinkers from knowing they are getting drunk. And, of course, good judgement and self-control are absolutely necessary for safe driving.

As BAC continues to build up, muscle control, vision, and coordination are affected more and more. Eventually, a person will pass out.

How Alcohol Affects Driving. All drivers are affected by drinking alcohol. Alcohol affects judgement, vision, coordination, and reaction time. It causes serious driving errors, such as:

- Increased reaction time to hazards.
- Driving too fast or too slow.
- Driving in the wrong lane.
- Running over the curb.
- Weaving.
- Straddling lanes.
- Quick, jerky starts.
- Not signaling, failure to use lights.

- Running stop signs and red lights.
- Improper passing.

These effects mean increased chances of a crash and chances of losing your driver license. Accident statistics show that the chance of a crash is much greater for drivers who have been drinking than for drivers who were not.

OTHER DRUGS

Besides alcohol, other legal and illegal drugs are being used more often. Laws prohibit possession or use of many drugs while on duty. They prohibit being under the influence of any "controlled substance"; an amphetamine (including "pep pills" and "bennies"), narcotics, or any other substance which can make the driver unsafe. This could include a variety of prescription and over-the-counter drugs (cold medicines) which may make the driver drowsy or otherwise affect safe driving ability. However, possession and use of a drug given to a driver by a doctor is permitted if the doctor informs the driver that it will not affect safe driving ability.

Pay attention to warning labels of legitimate drugs and medicines, and to doctor's orders regarding possible effects. Avoid illegal drugs. Don't use any drug that hides fatigue - the only cure for fatigue is rest. Alcohol can make the effects of other drugs much worse. The safest rule is don't mix drugs with driving at all.

Use of drugs can lead to traffic accidents resulting in death, injury, and property damage. Furthermore, it can lead to arrest, fines, and jail sentences. It can also mean the end of a person's driving career.

ILLNESS

Once in a while, you may become so ill that you cannot operate a motor vehicle safely. If this happens to you, you must not drive. However, in case of an emergency you may drive to the nearest place where you can safely stop.

2.20 Hazardous Materials Rules for All Commercial Drivers

All drivers should know something about hazardous materials. You must be able to recognize hazardous cargo, and you must know whether or not you can haul it without having a hazardous materials endorsement to your CDL license.

WHAT ARE HAZARDOUS MATERIALS

Hazardous materials are products that pose a risk to health, safety, and property during transportation. Figure 2-13 is the hazardous material table found in the federal rules. This table lists the 9 different hazard classes.

WHY ARE THERE RULES?

To Contain the Product: Many hazardous products can injure or kill on contact. To protect drivers and others from contact, the rules tell shippers how to package safely. Similar rules tell drivers how to load, transport, and unload bulk tanks. These are containment rules.

To Communicate the Risk: The shipper and transporter use a shipping paper and package labels to warn dockworkers, the public and drivers of the risk. Shipping orders, bills of lading, and manifests are all examples of shipping papers.

The shipping paper describes the hazardous materials being transported. Shipping orders, bills of lading, and manifests are all shipping papers. Shippers put diamond shaped hazard warning labels on most hazardous materials packages. These labels inform others of the hazard. If the diamond label won't fit on the container, shippers put the label on a tag. For example, compressed gas cylinders that will not hold a label will have tags or decals. Labels look like the examples shown in Figure 2-14.

Figure 2-13 Hazardous Materials Hazard Class/Division Table

Class	Division	Name of Class or Division	Example
1	1.1 1.2 1.3 1.4 1.5 1.6	Mass Explosives Projection Hazards Mass Fire Hazards Minor Hazards Very Insensitive Extremely Insensitive	Dynamite Flares Display Fireworks Ammunition Blasting Agents Explosive Devices
2	2.1 2.2 2.3	Flammable Gases Non-Flammable Gases Poisonous/Toxic Gases	Propane Helium Fluorine, Compressed
3	- - -	Flammable Liquids	Gasoline
4	4.1 4.2 4.3	Flammable Solids Spontaneously Combustible Spontaneously Combustible When Wet	Ammonium Picrate, Wetted White Phosphorus Sodium
5	5.1 5.2	Oxidizers Organic Peroxides	Ammonium Nitrate Methyl Ethyl Ketone Peroxide
6	6.1 6.2	Poison (Toxic Material) Infectious Substances	Potassium Cyanide Anthrax Virus
7	- - -	Radioactive	Uranium
8	- - -	Corrosives	Battery Fluid
9	- - -	Miscellaneous Hazardous Materials	Polychlorinated Biphenyls (PCB)
None	- - -	ORM-D (Other Regulated Material-Domestic)	Food Flavorings, Medicines
None	- - -	Combustible Liquids	Fuel Oil

After an accident or hazardous material spill or leak, you may be injured and unable to communicate the hazards of the materials you are transporting. Firefighters and police can prevent or reduce the amount of damage or injury at the scene if they know what hazardous materials are being carried. Your life, and the lives of others, may depend on quickly locating the hazardous materials shipping papers. For that reason, you must tab shipping papers related to hazardous materials or keep them on top of other shipping papers. You must also keep shipping papers:

- In a pouch on the driver's door, or
- In clear view within reach while driving, or
- On the driver's seat when you are out of the vehicle.

PLACARDS

Placards are used to warn others of hazardous materials. Placards are signs put on the outside of a vehicle which identify the hazard class of the cargo. A placarded vehicle must have at least 4 identical placards. They are put on the front, rear, and both sides (see Figure 9-3). Placards must be readable from all four directions. They are 10 3/4 inches square, turned upright on a point, in a diamond shape. Cargo tanks and other bulk packaging display the I.D. number of their contents on placards or orange panels.

Figure 2-14 Examples of Labels and Placard

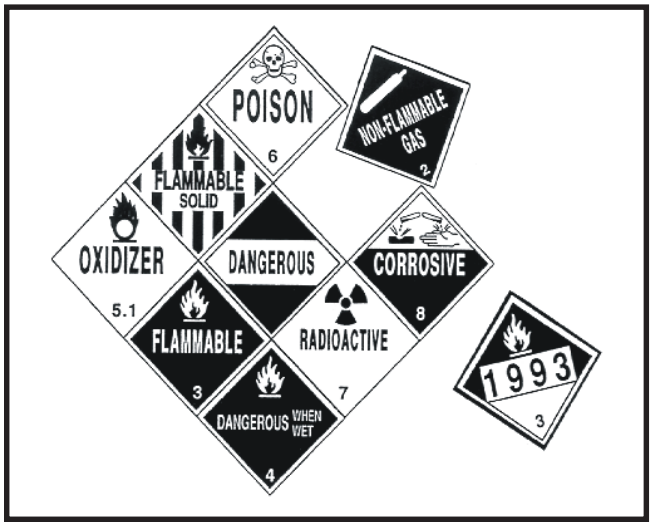

Not all vehicles carrying hazardous materials need to have placards. The rules about placards are given in Section 9 in Volume 2. You can drive a vehicle that carries hazardous materials if it does not require placards. If it requires placards, you must not drive it unless your driver license has the hazardous materials endorsement.

To Ensure Safe Drivers and Equipment. The rules require all drivers of placarded vehicles to learn how to safely load and transport hazardous products. They must have a commercial driver license with the hazardous materials endorsement.

To get the required endorsement you must pass a written test on material found in Section 9 in Volume 2. You will also need a tank endorsement if you transport hazardous products in a cargo tank on a truck larger than 26,000 pounds, gross vehicle weight rating.

Drivers who need the hazardous materials endorsement must learn the placard rules. If you do not know if your vehicle needs placards, ask your employer. **Never drive a vehicle needing placards unless you have the hazardous materials endorsement**. To do so is a crime. When stopped, you will be cited and you will not be allowed to drive your truck further. It will cost you time and money. A failure to placard when needed will risk your life and others if you have an accident. Emergency help will not know of your hazardous cargo.

Hazardous materials drivers must also know which products they can load together, and which they can not. These rules are also in Section 9 in Volume 2. Before loading a truck with more than one type of product, you must know if it is safe to load them together. If you do not know, ask your employer.

Test Your Knowledge

1. True or False? Common medicines for colds can make you sleepy.
2. What should you do if you do become sleepy while driving?
3. True or False? Coffee and a little fresh air will help a drinker sober up.
4. What is a hazardous materials placard?
5. Why are placards used?

These questions may be on your test. If you are unable to answer them all, re-read Sections 2.19 and 2.20.

Section 3: Transporting Cargo Safely

This section covers:
- Inspecting Cargo
- Cargo Weight and Balance
- Securing Cargo
- Liquids in Bulk
- Other Cargo Needing Care

This section tells you about hauling cargo safely. You must understand basic cargo safety rules to get a CDL.

If you load cargo wrong or do not secure it, it can be a danger to others as well as you. Loose cargo that falls off a vehicle can cause traffic problems and others could be hurt or killed. Loose cargo could hurt or kill you during a quick stop or crash. Your vehicle could be damaged by an overload. Steering could be affected by how a vehicle is loaded, making it more difficult to control the vehicle.

Whether or not you load and secure the cargo yourself, you are responsible for:

- Inspecting your cargo.
- Understanding the effects of overloads and poorly balanced weight.
- Knowing your cargo is properly secured.

These are discussed below.

> **Note:** If you intend to carry hazardous material that requires placards on your vehicle, you must also have a hazardous materials endorsement. Section 9 in Volume 2 has the information you need to pass the hazardous materials test.

3.1 Inspecting Cargo

BEFORE STARTING

As part of your pre-trip inspection, make sure the cargo is balanced and secured properly.

Inspect the cargo and its securing devices again within 25 miles after beginning a trip. Make any adjustments needed. Check the cargo and securing devices as often as necessary during a trip to keep the load secure. A good habit is to inspect again:

- After you have driven for 3 hours or 150 miles.
- After every break you take during driving.

Federal, state, and local regulations for commercial vehicle weight, securing cargo, covering loads, and where you can drive large vehicles vary from place to place. Know the rules for where you will be driving.

3.2 Weight and Balance

DEFINITIONS YOU SHOULD KNOW

Here are some definitions of weight you should know:

Gross vehicle weight (GVW). The total weight of a single vehicle, plus its load.

Gross combination weight (GCW). The total weight of a powered unit, plus trailer(s), plus the cargo.

Gross vehicle weight rating (GVWR). The maximum GVW specified by the manufacturer for a single vehicle, plus its load.

Gross combination weight rating (GCWR). The maximum GCW specified by the manufacturer for a specific combination of vehicles, plus its load.

Axle weight. The weight transmitted to the ground by one axle, or one set of axles.

Tire load. The maximum safe weight a tire can carry at a specified pressure. This rating is stated on the side of each tire.

Suspension systems. Suspension systems have a manufacturer's weight capacity rating.

Coupling device capacity. Coupling devices are rated for the maximum weight they can pull and/or carry.

LEGAL WEIGHT LIMITS

Weights must be kept within legal limits. States have maximums for GVWs, GCWs and axle weights. Often, maximum axle weights are set by a bridge formula. A bridge formula permits less maximum axle weight for axles that are closer together. This is to prevent overloading bridges and roadways.

Overloading can have bad effects on steering, braking, and speed control. Overloaded trucks need to go very slow on upgrades. Worse, they may gain too much speed on downgrades. Stopping distance increases. Brakes can fail when they are forced to work too hard.

During bad weather or in mountains, it may not be safe to operate at legal maximum weights. Take this into account before driving.

DON'T BE TOP-HEAVY

The height of the vehicle's center of gravity is very important for safe handling. A high center of gravity (cargo piled up high or heavy cargo on top) means you are more likely to tip over. It is most dangerous in curves or if you have to swerve to avoid a hazard. It is very important to distribute the cargo so it is as low as possible. Put the heaviest parts of the cargo on the bottom under the lightest parts.

BALANCE THE WEIGHT

Poor weight balance can make vehicle handling unsafe. Too much weight on the steering axle can cause hard steering. It can damage the steering axle and tires. Underloaded front axles (caused by shifting weight too far to the rear) can make the steering axle weight too light to steer safely. Too little weight on the driving axles can cause poor traction. The drive wheels may spin easily. During bad weather, the truck may not be able to keep going. Weight that is loaded so there is a high center of gravity causes greater chance of rollover. On flat bed vehicles, there is also a greater chance that the load will shift to the side or fall off. Figure 3-1 shows examples of the right and wrong way to balance cargo weight.

Figure 3-1 Always load cargo the right way!

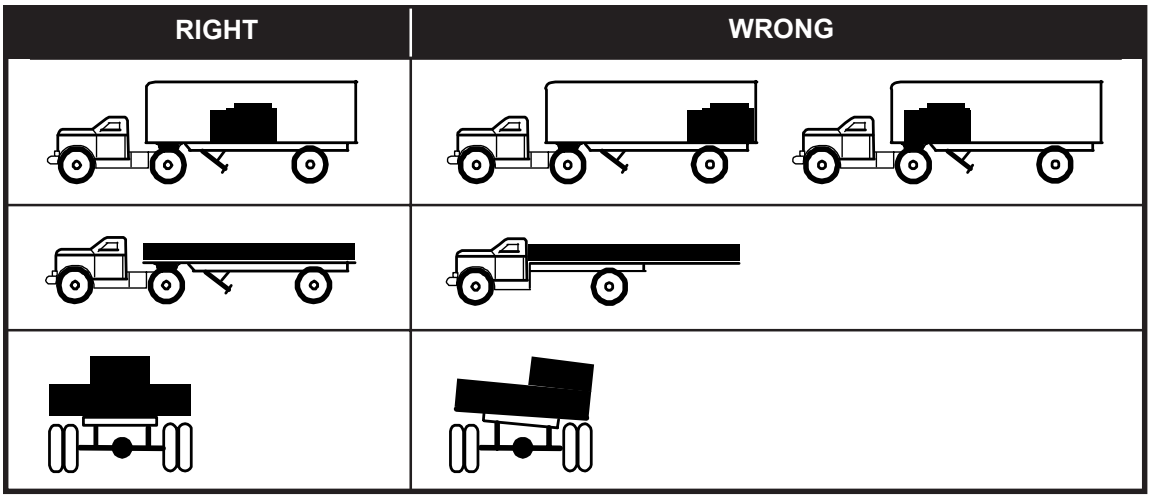

Test Your Knowledge

1. For what three things related to cargo are drivers responsible?
2. How often must you stop while on the road to check your cargo?
3. How is Gross Combination Weight Rating different from Gross Combination Weight?
4. Name two situations where legal maximum weights may not be safe.
5. What can happen if you don't have enough weight on the front axle?

These questions may be on your test. If you are unable to answer them all, re-read Sections 3.1 and 3.2.

3.3 Securing Cargo

BLOCKING AND BRACING

Blocking is used in the front, back, and/or sides of a piece of cargo to keep it from sliding. Blocking is shaped to fit snugly against cargo. It is secured to the cargo deck to prevent cargo movement.

Bracing is also used to prevent movement of cargo. Bracing goes from the upper part of the cargo to the floor and/or walls of the cargo compartment.

CARGO TIEDOWN

On flatbed trailers or trailers without sides, cargo must be secured to keep it from shifting or falling off. In closed vans, tiedowns can also be important to prevent cargo shifting that may affect the handling of the vehicle. Tiedowns must be of the proper type and proper strength. The combined strength of all cargo tiedowns must be strong enough to lift one half the weight of the piece of cargo tied down. Proper tiedown equipment must be used, including ropes, straps, chains, and

tensioning devices (winches, ratchets, clinching components). Tiedowns must be attached to the vehicle correctly (hook, bolt, rails, rings).

Cargo should have at least one tiedown for each 10 feet of cargo. Make sure you have enough tiedowns to meet this need. No matter how small the cargo, it should have at least two tiedowns holding it.

There are special requirements for securing various heavy pieces of metal. Find out what they are if you are to carry such loads.

HEADER BOARDS

Front end header boards ("headache racks") protect you from your cargo in case of a crash or emergency stop. Make sure the front end structure is in good condition. The front end structure should block the forward movement of any cargo you carry.

COVERING CARGO

There are two basic reasons for covering cargo:

- To protect people from spilled cargo.
- To protect the cargo from weather.

Spill protection is a safety requirement in many states. Be familiar with the laws for the states in which you drive.

You should look at your cargo covers in the mirrors from time to time while driving. A flapping cover can tear loose, uncovering the cargo, and possibly blocking your view or someone else's.

You cannot inspect sealed loads, but you should check that you don't exceed gross weight and axle weight limits.

SEALED AND CONTAINERIZED LOADS

Containerized loads generally are used when freight is carried part way by rail or ship. Delivery by truck occurs at the beginning and/or end of the journey. Some containers have their own tiedown devices or locks that attach directly to a special frame. Others need to be loaded onto flat bed trailers. They must be properly secured just like any other cargo.

3.4 Other Cargo Needing Special Attention

DRY BULK

Dry bulk tanks require special care because they often have a high center of gravity, and the load can shift. Be extremely cautious (slow and careful) going around curves and making sharp turns.

HANGING MEAT

Hanging meat (suspended beef, pork, lamb) in a refrigerated truck can be a very unstable load with a high center of gravity. Particular caution is needed on sharp curves such as off ramps and on ramps. Go slow.

LIVESTOCK

Livestock can move around in a trailer, causing unsafe handling. With less than a full load, use false bulkheads to keep livestock bunched together. Even when bunched, special care is necessary because livestock can lean on curves. This shifts the center of gravity and makes rollover more likely.

OVERSIZED LOADS

Over length, over width, and/or over weight loads require special transit permits. Driving is usually limited to certain times. Special equipment may be necessary such as "wide load" signs, flashing lights, flags, etc. Such loads may require a police escort or pilot vehicles bearing warning signs and/or flashing lights. These special loads require special driving care.

Test Your Knowledge

1. What is the minimum number of tiedowns for any flat bed load?
2. What is the minimum number of tiedowns for a 20 ft. load?
3. Name the two basic reasons for covering cargo on an open bed.
4. What must you check before transporting a sealed load?

These questions may be on your test. If you are unable to answer them all, re-read Sections 3.3 and 3.4.

PART TWO

4. *Transporting Passengers*

   Note: (Parts 4.7, 4.8, 4.9, 4.10, and 4.11 are in Volume II)

5. *Air Brakes*

6. *Combination Vehicles*

7. *Doubles and Triples*

8. *Tank Vehicles*

9. *Hazardous Materials*

   Note: (In Volume II)

Section 4: Transporting Passengers

This section covers:
- Definition of a Bus
- Pre-trip Inspection
- Loading
- Safe Driving with Buses

Bus drivers must have a commercial driver license if they drive a vehicle designed to transport 16 or more persons, including the driver.

Bus drivers must have a passenger endorsement on their commercial driver license. To get the endorsement you must pass a knowledge test on Sections 2 and 4 of this manual. (If your bus has air brakes, you must also pass a knowledge test on Section 5.) You must also pass the skills tests required for the class of vehicle you plan to drive.

4.1 Pre-trip Inspection

Before driving your bus, you must be sure it is safe. You must review the inspection report made by the previous driver. Only if defects reported earlier have been certified as repaired or not needing to be repaired, should you sign the previous driver's report. This is your certification that the defects reported earlier have been fixed.

VEHICLE SYSTEMS

Make sure these things are in good working order before driving:

- Service brakes, including air hose couplings (if your bus has a trailer).
- Parking brake.
- Steering mechanism.
- Lights and reflectors.
- Tires (front wheels must not have recapped or re-grooved tires).
- Horn.
- Windshield wiper or wipers.
- Rear-vision mirror or mirrors.
- Coupling devices (if present).
- Wheels and rims.
- Emergency equipment.

ACCESS DOORS AND PANELS

As you check the outside of the bus, close any open emergency exits. Also, close any open access panels (for baggage, restroom service, engine, etc.) before driving.

BUS INTERIOR

People sometimes damage unattended buses. Always check the interior of the bus before driving to ensure rider safety. Aisles and stairwells should always be clear. The following parts of your bus must be in safe working condition:

- Each handhold and railing.
- Floor covering.
- Signaling devices, including the restroom emergency buzzer, if the bus has a restroom.
- Emergency exit handles.

The seats must be safe for riders. All seats must be securely fastened to the bus.

Never drive with an open emergency exit door or window. The "Emergency Exit" sign on an emergency door must be clearly visible. If there is a red emergency door light, it must work. Turn it on at night or any other time you use your outside lights.

ROOF HATCHES

You may lock some emergency roof hatches in a partly open position for fresh air. However, do not leave them open as a regular practice. Keep in mind the bus's higher clearance while driving with them open.

Make sure your bus has the fire extinguisher and emergency reflectors required by law. The bus must also have spare electrical fuses, unless equipped with circuit breakers.

USE YOUR SEATBELT!

The driver's seat should have a seat belt. Always use it for safety.

4.2 Loading and Trip Start

Do not allow riders to leave carry-on baggage in a doorway or aisle. There should be nothing in the aisle that might trip other riders. Secure baggage and freight in ways that avoid damage and:

- Allow the driver to move freely and easily.
- Allow riders to exit by any window or door in an emergency.

- Protect riders from injury if carry-ons fall or shift.

HAZARDOUS MATERIALS

Watch for cargo or baggage containing hazardous materials. Most hazardous materials cannot be carried on a bus.

The Federal Hazardous Materials Table shows which materials are hazardous. They pose a risk to health, safety, and property during transportation. The rules require shippers to mark containers of hazardous material with the material's name, ID number, and hazard label. There are 9 different 4 inch, diamond-shaped hazard labels like the examples shown in Figure 4-1. Watch for the diamond-shaped labels. Do not transport any hazardous material unless you are sure the rules allow it.

FORBIDDEN HAZARDOUS MATERIALS

Buses may carry small-arms ammunition labeled ORM-D, emergency hospital supplies, and drugs. You can carry small amounts of some other hazardous materials if the shipper cannot send them any other way. Buses must **never** carry:

- Class 2 poison, **liquid** Class 6 poison, tear gas, irritating material.

Figure 4-1 Examples of Labels and a Placard

- More than 100 pounds of **solid** Class 6 poisons.
- Explosives in the space occupied by people, except small arms ammunition.
- Labeled radioactive materials in the space occupied by people.
- More than 500 pounds total of allowed hazardous materials, and no more than 100 pounds of any one class.

Riders sometimes board a bus with an unlabeled hazardous material. They may not know it is unsafe. Do not allow riders to carry on common hazards such as car batteries or gasoline.

STANDEE LINE

No rider may stand forward of the rear of the driver's seat. Buses designed to allow standing must have a 2 inch line on the floor or some other means of showing riders where they cannot stand. This is called the standee line. All standing riders must stay behind it.

AT YOUR DESTINATION

When arriving at the destination or intermediate stops announce:

- The location,
- Reason for stopping,
- Next departure time, and
- Bus number.

Remind riders to take carry-ons with them if they get off the bus. If the aisle is on a lower level than the seats, remind riders of the step-down. It is best to tell them before coming to a complete stop.

Charter bus drivers should not allow riders on the bus until departure time. This will help prevent theft or vandalism of the bus.

Test Your Knowledge

1. Name some things to check in the interior of a bus during a pre-trip inspection.
2. What are some hazardous materials you **can** transport by bus?
3. What are some hazardous materials you **can not** transport by bus?
4. What is a standee line?

These questions may be on your test. If you are unable to answer them all, re-read Sections 4.1 and 4.2.

4.3 On the Road

PASSENGER SUPERVISION

Many charter and intercity carriers have passenger comfort and safety rules. Mention rules about smoking, drinking, or use of radio and tape players at the start of the trip. Explaining the rules in the beginning will help to avoid trouble later on.

While driving, scan the interior of your bus as well as the road ahead, to the sides, and to the rear. You may need to remind riders about rules, or to keep arms and heads inside the bus.

AT STOPS

Riders can stumble when getting on or off and when the bus starts or stops. Caution riders to watch their step when leaving the bus. Wait for them to sit down or brace themselves before starting. Starting and stopping should be as smooth as possible to avoid rider injury.

Occasionally, you may have a drunk or disruptive rider. You must ensure this rider's safety as well as that of others. Don't discharge such riders where it would be unsafe for them. It may be safer at the next scheduled stop or a well-lighted area where there are other people. Many carriers have guidelines for handling disruptive riders.

COMMON ACCIDENTS

The most common bus crashes are those that happen at intersections. Use caution, even if a signal or stop sign controls other traffic. School and mass transit buses sometimes scrape off mirrors or hit passing vehicles when pulling out from a bus stop. Remember the clearance your bus needs, and watch for poles and tree limbs at stops. Know the size of the gap your bus needs to accelerate and merge with traffic. Wait for the gap to open before leaving the stop. Never assume other drivers will brake to give you room when you signal or start to pull out.

SPEED ON CURVES

Crashes on curves that kill people and destroy buses result from excessive speed, often when rain or snow has made the road slippery. Every banked curve has a safe "design speed." In good weather, the posted speed is safe for cars but it may be too high for many buses. With good traction, the bus may roll over; with poor traction, it might slide off the curve. Reduce speed for curves! If your bus leans toward the outside on a banked curve, you are driving too fast.

RAILROAD CROSSINGS STOPS

Stop your bus between 15 and 50 feet before railroad crossings. Listen and look in both directions for trains. You should open your forward door if it improves your ability to see or hear an approaching train. Before crossing after a train has passed, make sure there isn't another train coming in the other direction on other tracks. If your bus has a manual transmission, never change gears while crossing the tracks.

> ***Wisconsin Note:*** *In Wisconsin,* ***School*** *buses must stop at tracks used for industrial switching.*

You do not need to stop, but must slow down and carefully check for other vehicles:

- At street car crossings.
- Where a policeman or flagman is directing traffic.
- If a traffic signal shows green, and
- At crossings marked as "exempt" or "abandoned."

DRAWBRIDGES

Stop at drawbridges that do not have a signal light or traffic control attendant. Stop at least 50 feet before the draw of the bridge. Look to make sure the draw is completely closed before crossing. You do not need to stop, but must slow down and make sure it's safe, when:

- there is a traffic light showing green.
- the bridge has an attendant or traffic officer that controls traffic whenever the bridge opens.

4.4 After-Trip Vehicle Inspection

Inspect your bus at the end of each shift. If you work for an interstate carrier, you must complete a written inspection report for each bus driven. The report must specify each bus and list any defect that would affect safety or result in a breakdown. If there are no defects, the report should say so.

Riders sometimes damage safety-related parts such as handholds, seats, emergency exits, and windows. If you report this damage at the end of a shift, mechanics can make repairs before the bus goes out again. Mass transit drivers should also make sure passenger signaling devices and brake-door interlocks work properly.

4.5 Prohibited Practices

Avoid fueling your bus with riders on board unless absolutely necessary. Never refuel in a closed building with riders on board.

Don't talk with riders, or engage in any other distracting activity while driving.

Do not tow or push a disabled bus with riders aboard the vehicle, unless getting off would be unsafe. Only tow or push the bus to the nearest safe spot to discharge passengers. Follow your employer's guidelines on towing or pushing disabled buses.

4.6 Use of Brake-Door Interlocks

Urban mass transit coaches may have a brake and accelerator interlock system. The interlock applies the brakes and holds the throttle in idle position when the rear door is open. The interlock releases when you close the rear door. Do not use this safety feature in place of the parking brake.

Test Your Knowledge

1. Does it matter where you make a disruptive passenger get off the bus?
2. How far from a railroad crossing should you stop?
3. When must you stop before crossing a drawbridge?
4. List some "prohibited practices" for the driver of a bus.
5. True or False? The rear door of a transit bus has to be open to put on the parking brake.

These questions may be on your test. If you are unable to answer them all, re-read Sections 4.3, 4.4, 4.5, and 4.6.

Section 5: Air Brakes

This section covers:
- Air Brake System Parts
- Dual Air Brake Systems
- Inspecting Air Brakes
- Using Air Brakes

If you intend to drive a truck or bus with air brakes, or pull a trailer with air brakes, you should study this section. If you plan to pull a trailer with air brakes, you should also study Section 6 Combination Vehicles.

Air brakes use **compressed air** to make the brakes work. Air brakes are a good and safe way of stopping large and heavy vehicles, but the brakes must be well maintained and properly used.

Air brakes are really three different braking systems: service brake, parking brake, and emergency brake systems.

- The **service brake** system applies and releases the brakes when you use the brake pedal during normal driving.

- The **parking brake** system applies and releases the parking brakes when you use the parking brake control.

- The **emergency brake** system uses parts of the service and parking brake systems to stop the vehicle in the event of a brake system failure.

The parts of these systems are discussed in greater detail below.

5.1 The Parts of an Air Brake System

There are many parts to an air brake system. You should know about the parts discussed here.

AIR COMPRESSOR

The air compressor pumps air into the air storage tanks (reservoirs). The air compressor is connected to the engine through gears or a V-belt. The compressor may be air cooled or may be cooled by the engine cooling system. It may have its own oil supply, or be lubricated by engine oil. If the compressor has its own oil supply, check the oil level before driving.

AIR COMPRESSOR GOVERNOR

The governor controls when the air compressor will pump air into the air storage tanks. When air tank pressure rises to the “cut out” level (around 125 pounds per square inch or “psi”), the governor stops the compressor from pumping air. When the tank pressure falls to the “cutin” pressure (around 100 psi), the governor allows the compressor to start pumping again.

AIR STORAGE TANKS

Air storage tanks are used to hold compressed air. The number and size of air tanks varies among vehicles. The tanks will hold enough air to allow the brakes to be used several times even if the compressor stops working.

AIR TANK DRAINS

Compressed air usually has some water and some compressor oil in it, which is bad for the air brake system. For example, the water can freeze in cold weather and cause brake failure. The water and oil tend to collect in the bottom of the air tank. Be sure that you drain the air tanks completely. Each air tank is equipped with a drain valve in the bottom. There are two types:

- Manually operated by turning a quarter turn, shown in Figure 5-1, or by pulling a cable. You must drain the tanks yourself at the end of each day of driving.

- Automatic - the water and oil is automatically expelled. They may be equipped for manual draining as well.

The automatic types are available with electric heating devices. These help prevent freeze up of the automatic drain in cold weather.

Figure 5-1 Manual Drain Valve

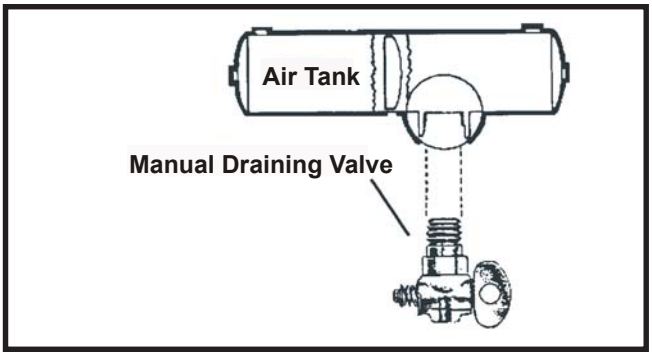

ALCOHOL EVAPORATOR

Some air brake systems have an alcohol evaporator to put alcohol into the air system. This helps to reduce the risk of ice in air brake valves and other parts during cold weather. Ice inside the system can make the brakes stop working.

Check the alcohol container and fill up as necessary, every day during cold weather. **Daily air tank drainage is still needed to get rid of water and oil** (unless the system has automatic drain valves).

SAFETY VALVE

A safety relief valve is installed in the first tank the air compressor pumps air to. The safety valve protects the tank and the rest of the system from too much pressure. The valve is usually set to open at 150 psi. If the safety valve releases air, something is wrong. Have the fault fixed by a mechanic.

THE BRAKE PEDAL

You put on the brakes by pushing down the brake pedal. (It is also called the foot valve or treadle valve.) Pushing the pedal down harder applies more air pressure. Letting up on the brake pedal reduces the air pressure and releases the brakes. Releasing the brakes lets some compressed air go out of the system, so the air pressure in the tanks is reduced. It must be made up by the air compressor. Pressing and releasing the pedal unnecessarily can let air out faster than the compressor can replace it. If the pressure gets too low, the brakes won't work.

FOUNDATION BRAKES

Foundation brakes are used at each wheel. The most common type is the S-cam drum brake, shown in Figure 5-2. The parts of the brake are discussed below:

- **Brake drums, shoes, and linings**. Brake drums are located on each end of the vehicle's axles. The wheels are bolted to the drums. The braking mechanism is inside the drum. To stop, the brake shoes and linings are pushed against the inside of the drum. This causes friction which slows the vehicle (and creates heat). The heat a drum can take without damage depends on how hard and how long the brakes are used. Too much heat can make the brakes stop working.

- **S-cam brakes**. When you push the brake pedal, air is let into each brake chamber (see Figure 5-2). Air pressure pushes the rod out, moving the slack adjuster, thus twisting the brake cam shaft. This turns the S-cam (so called because it is shaped like the letter "S"). The S-cam forces the brake shoes away from one another and presses them against the inside of the brake drum. When you release the brake pedal, the S-cam rotates back and a spring pulls the brake shoes away from the drum, letting the wheels roll freely again.

- **Wedge brakes**. In this type of brake, the brake chamber push rod pushes a wedge directly between the ends of two brake shoes. This shoves them apart and against the inside of the brake drum. Wedge brakes may have a single brake chamber, or two brake chambers, pushing wedges in at both ends of the brake shoes. Wedge type brakes may be self adjusting or may require manual adjustment.

- **Disc brakes**. In air operated disc brakes, air pressure acts on a brake chamber and slack adjuster, like S-cam brakes. But instead of the S-cam, a "power screw" is used. The pressure of the brake chamber on the slack adjuster turns the power screw. The power screw clamps the disc or rotor between the brake lining pads of a caliper, similar to a large C-clamp.

  Wedge brakes and disc brakes are less common than S-cam brakes.

Figure 5-2 S-cam Air Brake

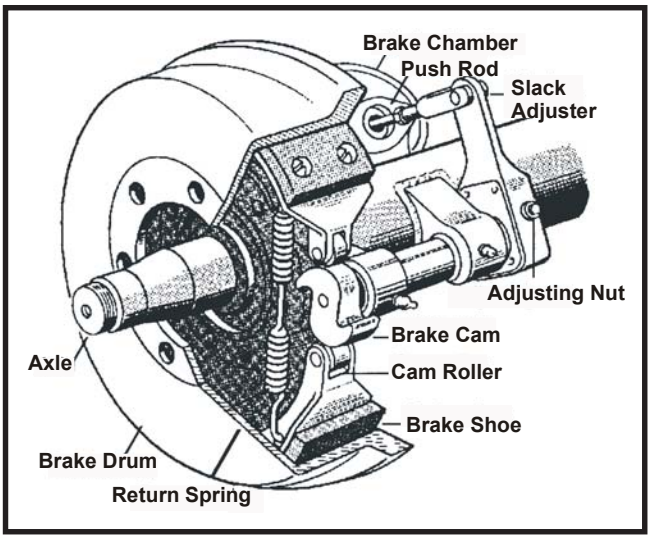

SUPPLY PRESSURE GAUGES

All air braked vehicles have a pressure gauge connected to the air tank. If the vehicle has a dual air brake system, there will be a gauge for each half of the system, or a single gauge with two needles. Dual systems will be discussed later. These gauges tell you how much pressure is in the air tanks.

APPLICATION PRESSURE GAUGES

This gauge shows how much air pressure you are applying to the brakes. (Note: this gauge is not on all vehicles.) Increasing application pressure to hold the same speed means the brakes are fading. You should slow down and use a lower gear. The need for increased pressure can also be caused by brakes out of adjustment, air leaks, or mechanical problems.

LOW AIR PRESSURE WARNING

A low air pressure warning signal is required on vehicles with air brakes. A warning signal you can see must come on before the air pressure in the tanks falls below 60 psi, or one half the compressor governor cutout pressure on older vehicles. The warning is usually a red light. A buzzer may also come on.

Another type of warning is the "wig wag." This device drops a mechanical arm into your view when the pressure in the system drops below 60 psi. An automatic wig wag will rise out of your view when the pressure in the system goes above 60 psi. The manual reset type must be placed in the "out of view" position manually. It will not stay in place until the pressure in the system is above 60 psi.

On large buses it is common for the low pressure warning devices to signal at 80 to 85 psi.

STOP LIGHT SWITCH

Drivers behind you must be warned when you put on your brakes. The air brake system does this with an electric switch that works by air pressure. The switch turns on the brake lights when you put on the air brakes.

FRONT BRAKE LIMITING VALVE

Some older vehicles (made before 1975) have a front brake limiting valve and a control in the cab. The control is usually marked "normal" and "slippery." When you put the control in the "slippery" position, the limiting valve cuts the "normal" air pressure to the front brakes by half. Limiting valves were used to reduce the chance of the front wheels skidding on slippery surfaces. However, they actually reduce the stopping power of the vehicle. Front wheel braking is good under all conditions. Tests have shown front wheel skids from braking are not likely even on ice. **Make sure the control is in the "normal" position to have normal stopping power**.

Many vehicles have automatic front wheel limiting valves. They reduce the air to the front brakes except when the brakes are put on very hard (60 psi or more application pressure). These valves cannot be controlled by the driver.

SPRING BRAKES

All trucks, truck tractors, and buses must be equipped with emergency brakes and parking brakes. They must be held on by mechanical force (because air pressure can eventually leak away). Spring brakes are usually used to meet these needs. When driving, powerful springs are held back by air pressure. If the air pressure is removed, the springs put on the brakes. A parking brake control in the cab allows the driver to let the air out of the spring brakes. This lets the springs put the brakes on. A leak in the air brake system which causes all the air to be lost will also cause the springs to put on the brakes.

Tractor and straight truck spring brakes will come fully on when air pressure drops to a range of 20 to 45 psi (typically 20 to 30 psi). Do not wait for the brakes to come on automatically. When the low air pressure warning light and/or buzzer first come on, bring the vehicle to a safe stop right away, while you can still control the brakes.

The braking power of spring brakes depends on the brakes being in adjustment. If the brakes are not adjusted properly, neither the regular brakes nor the emergency/parking brakes will work right.

PARKING BRAKE CONTROLS

In newer vehicles with air brakes, you put on the parking brakes using a diamondshaped, yellow, push/pull control knob. You pull the knob out to put the parking brakes (spring brakes) on, and push it in to release them. On older vehicles, the parking brakes may be controlled by a lever. Use the parking brakes whenever you park.

> **Caution:** Never push the brake pedal down when the spring brakes are on. If you do, the brakes could be damaged by the combined forces of the springs and the air pressure. Many brake systems are designed so this will not happen. But not all systems are set up that way, and those that are, may not always work. It is much better to develop the habit of not pushing the brake pedal down when the spring brakes are on.

Modulating Control Valves. In some vehicles a control handle on the dash board may be used to apply the spring brakes gradually. This is called a modulating valve. It is spring loaded so you have a feel for the braking action. The more you move the control lever, the harder the spring brakes come on. They work this way so you can control the spring brakes if the service brakes fail. When parking a vehicle with a modulating control valve, move the lever as far as it will go and hold it in place with the locking device.

Dual Parking Control Valves. When main air pressure is lost, the spring brakes come on. Some vehicles, such as buses, have a separate air tank which can be used to release the spring brakes. This is so you can move the vehicle in an emergency. One of the valves is a pushpull type and is used to put on the spring brakes for parking. The other valve is spring loaded in the "out" position. When you push the control in, air from the separate air tank releases the spring brakes so you can move. When you release the button, the spring brakes come on again. There is only enough air in the separate tank to do this a few times. Therefore, plan carefully when moving. Otherwise, you may be stopped in a dangerous location when the separate air supply runs out.

Test Your Knowledge

1. Why must air tanks be drained?
2. What is a supply pressure gauge used for?
3. True or False? All vehicles with air brakes must have a low air pressure warning signal.
4. What are spring brakes?
5. True or False? Front wheel brakes are good under all conditions.

These questions may be on your test. If you are unable to answer them all, re-read Sections 5.1.

5.2 Dual Air Brakes

Most newer heavy duty vehicles use dual air brake systems for safety. A dual air brake system has two separate air brake systems which use a single set of brake controls. Each system has its own air tanks, hoses, lines, etc. One system typically operates the regular brakes on the rear axle or axles. The other system operates the regular brakes on the front axle, and possibly one rear axle. Both systems supply air to the trailer (if there is one). The first system is called the "primary" system. The other is called the "secondary" system.

Before driving a vehicle with a dual air system, allow time for the air compressor to build up a minimum of 100 psi pressure in both the primary and secondary systems. Watch the primary and secondary air pressure gauges (or needles, if the system has two needles in one gauge). Pay attention to the low air pressure warning light and/or buzzer. The warning light and/or buzzer should shut off when air pressure in both systems rises to a value set by the manufacturer. This value must be greater than 60 psi.

The warning light and/or buzzer should come on before the air pressure drops below 60 psi in either system. If this happens while driving, you should stop right away and safely park the vehicle. If one air system is very low on pressure, either the front or the rear brakes will not be operating fully. This means it will take you longer to stop. Bring the vehicle to a safe stop and have the air brakes system fixed.

5.3 Inspecting Air Brake Systems

You should use the basic seven step inspection procedure described in Section 2 to inspect your vehicle. There are more things to inspect on a vehicle with air brakes than one without them. We discuss these things below, in the order that they fit into the seven-step method.

DURING STEP 2 - ENGINE COMPARTMENT CHECKS

Check Air Compressor Drive Belt (if compressor is belt driven). If the air compressor is belt driven, check the condition and tightness of the belt. The belt should be in good condition.

DURING STEP 5 - WALKAROUND INSPECTION

Check Manual Slack Adjusters on S-cam Brakes. Park on level ground and chock the wheels to prevent the vehicle from moving. Turn off the parking brakes so you can move the slack adjusters. Use gloves and pull hard on each slack adjuster that you can get to. If a slack adjuster moves more than about one inch where the push rod attaches to it, it probably needs adjustment. Adjust it or have it adjusted. Vehicles with too much brake slack can be very hard to stop. Out-of-adjustment brakes are the most common problem found in roadside inspections. Be safe. Check the slack adjusters.

Check Brake Drums (or Discs), Linings, and Hoses. Brake drums (or discs) must not have cracks longer than one half the width of the friction area. Linings (friction material) must not be loose or soaked with oil or grease. They must not be dangerously thin. Mechanical parts must be in place, not broken or missing. Check the air hoses connected to the brake chambers to make sure they aren't cut or worn due to rubbing.

STEP 7 - FINAL AIR BRAKE CHECK

Do the following checks instead of the hydraulic brake check shown in Section Two "Step 7: Check Brake System."

Test air leakage rate (**static check**). With a fully-charged air system (typically 120 psi), turn off the engine, chock the wheels, release (push in) the parking brake button (all vehicles) and trailer air supply button (for combination vehicles) and time the air pressure drop. After the initial pressure drop, the loss rate should be no more than 2 psi in one minute for single vehicles and no more than 3 psi in one minute for combination vehicles.

(L) - LEAKS

Test air brake system for leaks. With parking brake, (all vehicles) and trailer air supply button (for combination vehicles) released (pushed in), apply firm pressure to the service brake pedal. Watch the air supply gauge and listen for leaks. After the initial pressure drop, the loss rate for single vehicles should be no more than 3 psi in one minute and no more than 4 psi in one minute for combination vehicles. If the air loss rate exceeds these figures, have the air system repaired before operating.

(A) - ALARM

Test low pressure warning alarm and/or signal. Turn the key to the on position. Rapidly apply and release the service brake pedal to reduce air tank pressure. The low air pressure warning signal must come on before the pressure drops to less than 60 psi in the air tank.

If the warning alarm/signal doesn't work, you could be losing air pressure without knowing it. This could cause the spring brakes to activate suddenly. Only limited braking can be done before the spring brakes come on.

(B) - BUTTON (S)

Check that the spring brakes come on automatically. Continue to rapidly apply and release the service brake pedal to further reduce air tank pressure. The trailer air supply button (if it's a combination vehicle) and parking brake button should pop out when the air pressure falls to the manufacturer's specification (usually between 20 to 40 psi). This causes the spring brakes to come on.

Check rate of air pressure buildup. When the engine is operating at 1800 RPM, the pressure should build from 85 to 100 psi within 45 seconds in dual air systems. If the vehicle has larger than minimum air tanks, the buildup time can be longer and still be safe. Check the manufacturer's specifications.

If air pressure does not build up fast enough, your pressure may drop too low during driving, requiring an emergency stop. Do not drive until you get the problem fixed.

Check air compressor governor cutin and cutout pressures. Pumping by the air compressor should start at about 100 psi and stop at about 125 psi. (Check manufacturer's specifications.) Run the engine at a fast idle. The air governor should cut-out the air compressor at about the manufacturer's specified pressure. The air pressure shown by your gauge(s) will stop rising. With the engine idling, step on and off the brake to reduce the air tank pressure. The compressor should cut-in at about the manufacturer's specified cut-in pressure. The pressure should begin to rise.

If the air governor does not work as described above, it may need to be fixed. A governor that does not work properly may not keep enough air pressure for safe driving.

Test parking brake. Stop the vehicle, put the parking brake on, and gently pull against it in a low gear to test that the parking brake will hold.

Test service brakes. Wait for normal air pressure, release the parking brake, move the vehicle forward slowly (about 5 mph), and apply the brakes firmly using the brake pedal. Note any vehicle "pulling" to one side, unusual feel, or delayed stopping action.

This test may show you problems which you otherwise wouldn't know about until you needed the brakes on the road.

Note: To pass the pre-trip inspection, the driver must locate and identify all air brake components, perform the LAB (leaks, alarm and button(s)) and correctly check the service (foot) brake operation.

Test Your Knowledge

1. What is a dual air brake system?
2. What are the slack adjusters?
3. How can you check slack adjusters?
4. How can you test the low pressure warning signal?
5. What can you check to make sure the spring brakes will come on automatically?
6. What are the maximum leakage rates?

These questions may be on your test. If you are unable to answer them all, re-read Sections 5.2 and 5.3.

5.4 Using Air Brakes

NORMAL STOPS

Push the brake pedal down. Control the pressure so the vehicle comes to a smooth, safe stop. If you have a manual transmission, don't push the clutch in until the engine RPM is down close to idle. When stopped, select a starting gear.

EMERGENCY STOPS

If somebody suddenly pulls out in front of you, your natural response is to hit the brakes. This is a good response if there's enough distance to stop and you use the brakes correctly.

You should brake in a way that will keep your vehicle in a straight line and allow you to turn if it becomes necessary. You can use the "controlled braking" method or the "stab braking" method.

Controlled Braking. With this method, you apply the brakes as hard as you can **without** locking the wheels. Keep steering wheel movements very small while doing this. If you need to make a larger steering adjustment or if the wheels lock, release the brakes. Reapply the brakes as soon as you can.

Stab Braking.

- Apply your brakes all the way.
- Release the brakes when the wheels lock up.
- As soon as the wheels start rolling, apply the brakes fully again. (It can take up to one second for the

wheels to start rolling after you release the brakes. If you reapply the brakes before the wheels start rolling, the vehicle won't straighten out.)

> **Note:** If you drive a vehicle with anti-lock brakes, you should read and follow the directions found in the vehicle owner's manual for stopping quickly.

STOPPING DISTANCE

We talked about stopping distance in Section 2 under "Speed and Stopping distance." With air brakes there is an added delay - the time required for the brakes to work after the brake pedal is pushed. With hydraulic brakes (used on cars and light/medium trucks), the brakes work instantly. However, with air brakes, it takes a little time (one half second or more) for the air to flow through the lines to the brakes. Thus, the total stopping distance for vehicles with air brake systems is made up of four different factors.

	Perception Distance
+	Reaction Distance
+	Brake Lag Distance
+	Effective Braking Distance
=	Total Stopping Distance

The air brake lag distance at 55 mph on dry pavement adds about 32 feet. So at 55 mph for an average driver under good traction and brake conditions, the total stopping distance is over 300 feet. This is longer than a football field.

BRAKE FADING OR FAILURE

Brakes are designed so brake shoes or pads rub against the brake drum or disks to slow the vehicle. Braking creates heat, but brakes are designed to take a lot of heat. However, brakes can fade or fail from excessive heat caused by using them too much and not relying on the engine braking effect.

Excessive use of the service brakes results in overheating and leads to brake fade. Brake fade results from excessive heat causing expansion of the brake drums and chemical changes in the brake lining, which reduces friction. As the overheated drums expand, the brake shoes and linings have to move farther to contact the drums, and the force of this contact is also reduced. Continued overuse may increase brake fade until the vehicle cannot be slowed down or stopped at all.

Brake fade is also affected by adjustment. To safely control a vehicle, every brake must do its share of the work. Brakes out-of-adjustment will stop doing their share before those that are in adjustment. The other brakes can then overheat and fade and there will not be sufficient braking available to control the vehicle(s). Brakes can get out-of-adjustment quickly, especially when they are hot. Therefore, brake adjustment must be checked frequently.

PROPER BRAKING TECHNIQUE

Remember - the use of brakes on a long and/or steep downgrade is only a supplement to the braking effect of the engine. Once the vehicle is in the proper low gear, the following is the proper braking technique:

- Apply the brakes just hard enough to feel a definite slowdown.
- When your speed has been reduced to approximately 5 mph below your "safe" speed, release the brakes. [This brake application should last for about three (3) seconds.]
- When your speed has increased to your "safe" speed, repeat steps 1 and 2.

For example, if your "safe" speed is 40 mph, you would not apply the brakes until your speed reaches 40 mph. You now apply the brakes hard enough to gradually reduce your speed to 35 mph and then release the brakes. Repeat this as often as necessary until you have reached the end of the downgrade.

LOW AIR PRESSURE

If the low air pressure warning comes on, **stop and safely park your vehicle as soon as possible**. There might be an air leak in the system. Controlled braking is possible only while enough air remains in the air tanks. The spring brakes will come on when the air pressure drops into the range of 20 to 45 psi. A heavily loaded vehicle will take a long distance to stop because the spring brakes do not work on all axles. Lightly loaded vehicles or vehicles on slippery roads may skid out of control when the spring brakes come on. It is much safer to stop while there is enough air in the tanks to use the foot brakes.

PARKING BRAKES

Any time you park, use the parking brakes, except as noted below. Pull the parking brake control knob out to apply the parking brakes, push it in to release them. The control will be a yellow, diamond -shaped knob labeled "parking brakes" on newer vehicles. On older vehicles, it may be a round blue knob or some other shape (including a lever that swings from side to side or up and down).

Don't use the parking brakes if the brakes are very hot (from just having come down a steep grade), or if the brakes are very wet in freezing temperatures. If they are used while they are very hot, they can be damaged by the heat. If they are used in freezing temperatures when the brakes are very wet, they can freeze so the vehicle cannot move. Use wheel chocks to hold the vehicle. Let hot brakes cool before using the parking brakes. If the brakes are wet, use the brakes lightly while driving in a low gear to heat and dry them.

If your vehicle does not have automatic air tank drains, drain your air tanks at the end of each working day to remove moisture and oil. Otherwise, the brakes could fail.

Never leave your vehicle unattended without applying the parking brakes or chocking the wheels. Your vehicle might roll away and cause injury and damage.

Test Your Knowledge

1. Why should you be in the proper gear **before** starting down a hill?
2. What factors can cause brakes to fade or fail?
3. True or False? The use of brakes on a long steep downgrade is only a supplement to the braking effect of the engine.
4. True or False? If you are away from your vehicle only a short time, you don't need to use the parking brake.
5. How often should you drain air tanks?

These questions may be on your test. If you are unable to answer them all, re-read Sections 5.4.

Section 6: Combination Vehicles

This section covers:
- Driving Combination Vehicles
- Combination Vehicle Air Brakes
- Inspecting Combinations

This section provides information needed to pass the tests for combination vehicles (tractor-trailer, doubles, triples, straight truck and trailer). The information is only to give you the minimum knowledge needed for driving common combination vehicles. You should also study Section 7 if you need to pass the tests for doubles-triples.

6.1 Driving Combination Vehicles Safely

Combination vehicles are usually heavier, longer, and require more driving skill than single commercial vehicles. This means that drivers of combination vehicles need more knowledge and skill than drivers of single vehicles. In this section, we talk about some important safety factors that apply specifically to combination vehicles.

ROLLOVER RISKS

More than half of truck driver deaths in crashes are the result of truck rollovers. When more cargo is piled up in a truck, the "center of gravity" moves higher up from the road. The truck becomes easier to turn over. Fully loaded rigs are 10 times more likely to roll over in a crash than empty rigs. The following two things will help you prevent rollover:

- Keep the cargo as close to the ground as possible
- Drive slowly around turns.

Keeping cargo low is even more important in combination vehicles than in straight trucks. Also, keep the load centered on your rig. If the load is to one side so it makes a trailer lean, a rollover is more likely. Make sure your cargo is centered and spread out as much as possible. (Cargo distribution is covered in Section 3 of this manual.)

Rollovers happen when you turn too fast. Drive slowly around corners, on-ramps, and off-ramps. Avoid quick lane changes, especially when fully loaded.

STEER GENTLY

Trucks with trailers have a dangerous "crack-the-whip" effect. When you make a quick lane change, the crack-the-whip effect can turn the trailer over. There are many accidents where only the trailer has overturned.

"Rearward amplification" causes the crack-the-whip effect. Figure 6-1 shows eight types of combination vehicles and the rearward amplification each has in a quick lane change. Rigs with the least crack-the-whip effect are shown at the top and those with the most, at the bottom. Rearward amplification of 2.0 in the chart means that the rear trailer is twice as likely to turn over as the tractor. You can see that triples have a rearward amplification of 3.5. This means you can roll the last trailer of triples 3.5 times as easily as a five-axle tractor-semi.

Figure 6-1 Influence of Combination Type on Rearward Amplification

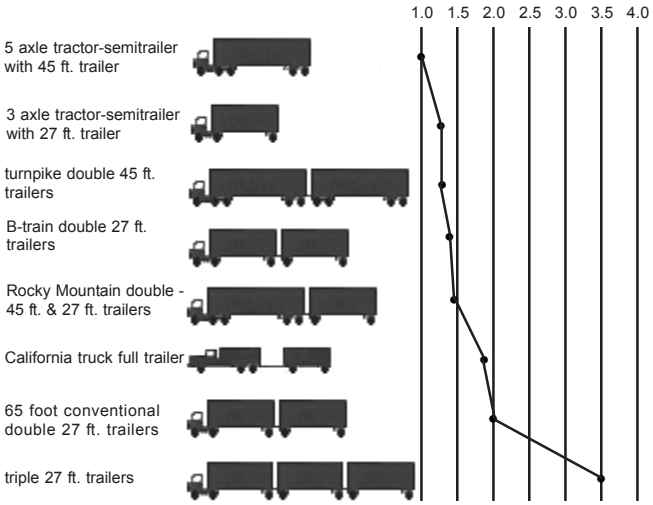

(from R.D. Ervin, R.L. Nisonger, C.C. MacAdam, and P.S. Fancher, "Influence of size and weight variables on the stability and control properties of heavy trucks", University of Michigan Transportation Research Institute, 1983.)

Steer gently and smoothly when you are pulling trailers. If you make a sudden movement with your steering wheel, your trailer could tip over. Follow far enough behind other vehicles (at least one second for each 10 feet of your vehicle length, plus another second if going over 40 mph). Look far enough down the road to avoid being surprised and having to make a sudden lane change. At night, drive slowly enough to see obstacles with your headlights before it is too late to change lanes or stop gently. Slow down to a safe speed **before** going into a turn.

BRAKE EARLY

Control your speed whether fully loaded or empty. Large combination vehicles take longer to stop when they are empty than when they are fully loaded. When lightly loaded, the very stiff suspension springs and strong brakes give poor traction and make it very easy to lock up the wheels. Your trailer can swing out and strike other vehicles. Your tractor can jackknife very quickly (Figure 6-2). You must also be very careful about driving "bobtail" tractors (tractors without semitrailers). Tests have shown that bobtails can be very hard to stop smoothly. It takes them longer to stop than a tractor-semitrailer loaded to maximum gross weight.

In any combination rig, allow lots of following distance

and look far ahead, so you can brake early. Don't be caught by surprise and need to make a "panic" stop.

Figure 6-2 Tractor Jackknife

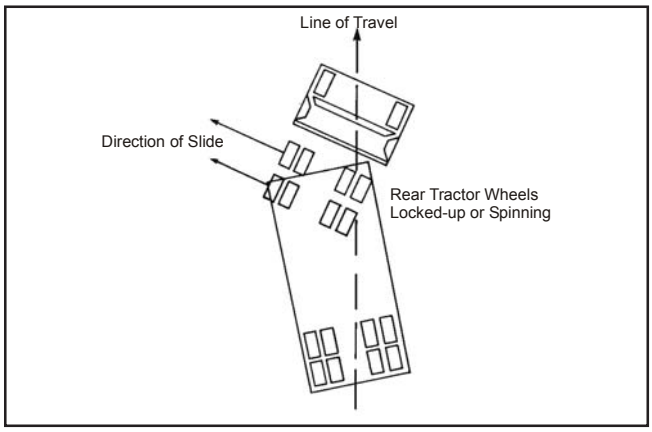

PREVENT TRAILER SKIDS

When the wheels of a trailer lock up, the trailer will tend to swing around. This is more likely to happen when the trailer is empty or lightly loaded. This type of jackknife is often called a "trailer jackknife." This is shown in Figure 6-3.

Figure 6-3 Tractor Jackknife

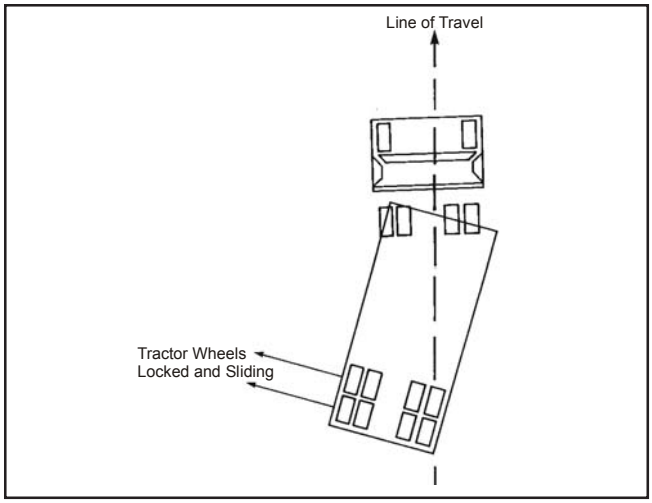

The procedure for stopping a trailer skid is as follows:

- **Recognize the skid.** The earliest and best way to recognize the trailer has started to skid is by seeing it in your mirrors. Any time you apply the brakes hard, check the mirrors to make sure the trailer is staying where it should be. Once the trailer swings out of your lane, it is very difficult to prevent a jackknife.

- **Stop using the brake.** Release the brakes to get traction back. Do **not** use the trailer hand brake (if you have one) to "straighten out the rig." This is the wrong thing to do since the brakes on the trailer wheels caused the skid in the first place. Once the trailer wheels grip the road again, the trailer will start to follow the tractor and straighten out.

TURN WIDE

When a vehicle goes around a corner, the rear wheels follow a different path than the front wheels. This is called **offtracking** or "cheating." Figure 6-4 shows how offtracking causes the path followed by a tractor-semi to be wider than the rig itself. Longer vehicles will offtrack more. The rear wheels of the powered unit (truck or tractor) will offtrack some, and the rear wheels of the trailer will offtrack even more. If there is more than one trailer, the rear wheels of the last trailer will offtrack the most. Steer the front end wide enough around a corner so the rear end does not run over the curb, pedestrians, other vehicles, etc. However, keep the rear of your vehicle close to the curb. This will stop other drivers from passing you on the right.

Figure 6-4 Offtracking in a 90-degree turn

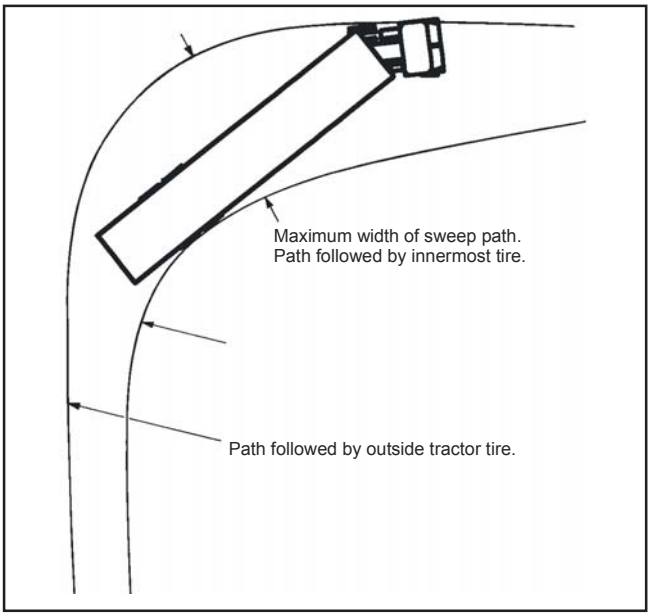

If you cannot complete your turn without entering another traffic lane, turn wide as you **complete the turn** (Figure 6-5). This is better than swinging wide to the left (Figure 6-6) before starting the turn because it will keep other drivers from passing you on the right. If drivers pass on the right, you could collide with them when you turn.

Figure 6-5
Do this so cars don't try to pass you on the right.

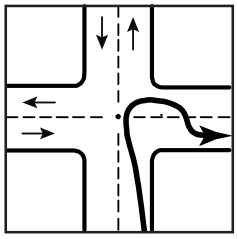

Figure 6-6
Don't do this!

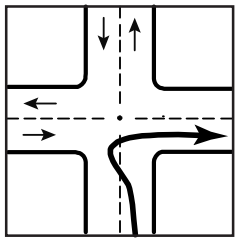

Test Your Knowledge
1. What two things are important to prevent rollover? 2. When you turn suddenly while pulling doubles, which trailer is most likely to turn over? 3. Why should you not use the trailer hand brake to straighten out a jackknifing trailer? 4. What is offtracking? 5. Why should you turn like it shows in Figure 6-5?
These questions may be on your test. If you are unable to answer them all, re-read Sections 6.1.

6.2 Combination Vehicle Air Brakes

You should study "Section 5: Air Brakes" before reading this. In combination vehicles, the braking system has parts to control the trailer brakes, in addition to the parts described in Section 5. These parts are described below.

TRAILER HAND VALVE

The trailer hand valve (also called the trolley valve or Johnson bar) works the trailer brakes. The trailer hand valve should be used only to test the trailer brakes. Do **not** use it while driving because of the danger of making the trailer skid. The foot brake sends air to **all** of the brakes on the vehicle (including the trailer(s)). There is much less danger of causing a skid or jackknife when using just the foot brake.

Never use the hand valve for parking because all the air might leak out unlocking the brakes (in trailers that don't have spring brakes). Always use the parking brakes when parking. If the trailer does not have spring brakes, use wheel chocks to keep the trailer from moving.

TRACTOR PROTECTION VALVE

The tractor protection valve keeps air in the tractor or truck should the trailer break away or develop a bad leak. The tractor protection valve is controlled by the "trailer air supply" control valve in the cab. The control valve allows you to open and shut the tractor protection valve. The tractor protection valve will close automatically if air pressure is low (in the range of 20 to 45 psi). When the tractor protection valve closes, it stops any air from going out of the tractor. It also lets the air out of the trailer emergency line. This causes the trailer emergency brakes to come on. (Emergency brakes are covered later.)

TRAILER AIR SUPPLY CONTROL

The trailer air supply control on newer vehicles is a red 8-sided knob which you use to control the tractor protection valve. You push it in to supply the trailer with air, and pull it out to shut the air off and put on the trailer emergency brakes. The valve will pop out (thus closing the tractor protection valve) when the air pressure drops into the range of 20 to 45 psi. Tractor protection valve controls, or "emergency" valves on older vehicles, may not operate automatically. There may be a lever rather than a knob. The "normal" position is used for pulling a trailer. The "emergency" position is used to shut the air off and put on the trailer emergency brakes.

TRAILER AIR LINES

Every combination vehicle has two air lines, the **service** line and the **emergency** line. They run between each vehicle (tractor to trailer, trailer to dolly, dolly to second trailer, etc.)

Service Air Line. The service line (also called the control line or signal line) carries air which is controlled by the foot brake or the trailer hand brake. Depending on how hard you press the foot brake or hand valve, the pressure in the service line will similarly change. The service line is connected to relay valves. These valves allow the trailer brakes to be applied more quickly than would otherwise be possible.

Emergency Air Line. The emergency line (also called the supply line) has two purposes. First, it supplies air to the trailer air tanks. Second, the emergency line controls the emergency brakes on combination vehicles. Loss of air pressure in the emergency line causes the trailer emergency brakes to come on. The pressure loss could be caused by a trailer breaking loose, thus tearing apart the emergency air hose, or it could be caused by a hose, metal tubing, or other part which breaks, letting the air out. When the emergency line loses pressure, it also causes the tractor protection valve to close (the air supply knob will pop out).

Emergency lines are often coded with the color red (red hose, red couplers, or other parts) to keep from getting them mixed up with the blue service line.

HOSE COUPLERS (GLAD HANDS)

Glad hands are coupling devices used to connect the service and emergency air lines from the truck or tractor to the trailer. The couplers have a rubber seal which prevents air from escaping. Clean the couplers and

rubber seals before a connection is made. When connecting the glad hands, press the two seals together with the couplers at a 90 degree angle to each other. A turn of the glad hand attached to the hose will join and lock the couplers.

Some vehicles have “dead end” or dummy couplers to which the hoses may be attached when they are not in use. This will prevent water and dirt from getting into the coupler and the air lines. Use the dummy couplers when the air lines are not connected to a trailer. If there are no dummy couplers, the glad hands can sometimes be locked together (depending on the couplings). It is very important to keep the air supply clean.

When coupling, make sure to couple the proper glad hands together. To help avoid mistakes, colors are sometimes used. Blue is used for the service lines and red for the emergency (supply) lines. Sometimes, metal tags are attached to the lines with the words “service” and “emergency” stamped on them.

If you do cross the air lines, supply air will be sent to the service line instead of going to charge the trailer air tanks. Air will not be available to release the trailer spring brakes (parking brakes). If the spring brakes don’t release when you push the trailer air supply control, check the air line connections.

Older trailers do not have spring brakes. If the air supply in the trailer air tank has leaked away, there will be no emergency brakes, and the trailer wheels will turn freely. If you crossed the air lines, you could drive away but you wouldn’t have trailer brakes. **This would be very dangerous.** Always test the trailer brakes before driving with the hand valve or by pulling the air supply (tractor protection valve) control. Pull gently against them in a low gear to make sure the brakes work.

TRAILER AIR TANKS

Each trailer and converter dolly has one or more air tanks. They are filled by the emergency (supply) line from the tractor. They provide the air pressure used to operate trailer brakes. Air pressure is sent from the air tanks to the brakes by relay valves. The pressure in the service line tells how much pressure the relay valves should send to the trailer brakes. The pressure in the service line is controlled by the brake pedal and the trailer hand brake.

It is important that you don’t let water and oil build up in the air tanks. If you do, the brakes may not work correctly. Each tank has a drain valve on it and you should drain each tank every day. If your tanks have automatic drains, they will keep out most moisture. But you should still open the drains to make sure.

SHUT-OFF VALVES

Shut-off valves (also called cut-out cocks) are used in the service and supply air lines at the back of trailers used to tow other trailers. These valves permit closing the air lines off when another trailer is not being towed. You must check that all shut-off valves are in the **open** position except the ones at the back of the last trailer, which must be **closed**.

TRAILER SERVICE, PARKING AND EMERGENCY BRAKES

Newer trailers have spring brakes just like trucks and truck tractors. However, converter dollies and trailers built before 1975 are not required to have spring brakes. Those that do not have spring brakes have emergency brakes which work from the air stored in the trailer air tank. The emergency brakes come on whenever air pressure in the emergency line is lost. These trailers have no parking brake. The emergency brakes come on whenever the air supply knob is pulled out or the trailer is disconnected. But the brakes will hold only as long as there is air pressure in the trailer air tank. Eventually, the air will leak away and there will be no brakes. Therefore, it is very important for safety that you use wheel chocks when you park trailers without spring brakes.

A major leak in the emergency line will cause the tractor protection valve to close and the trailer emergency brakes to come on.

You may not notice a major leak in the service line until you try to put the brakes on. Then, the air loss from the leak will lower the air tank pressure quickly. If it goes low enough, the trailer emergency brakes will come on.

Test Your Knowledge

1. Why should you not use the trailer hand valve while driving?
2. Describe what the trailer air supply control does.
3. Describe what the service line is for.
4. What is the emergency air line for?
5. Why should you use chocks when parking a trailer without spring brakes?
6. Where are shut-off valves?

These questions may be on your test. If you are unable to answer them all, re-read Sections 6.2.

6.3 Coupling and Uncoupling

Knowing how to couple and uncouple correctly is basic to safe operation of combination vehicles. Incorrect coupling and uncoupling can be very dangerous. General coupling and uncoupling steps are listed below. There are differences between different rigs, so learn the details of coupling and uncoupling the truck(s) you will operate.

COUPLING TRACTOR-SEMITRAILERS

Step 1. Inspect the Fifth Wheel

- Check for damaged/missing parts.
- Check to see that the mounting to the tractor is secure (no cracks in frame, etc.)
- Be sure the fifth wheel plate is greased as required. Failure to keep the fifth wheel plate lubricated could cause steering problems because of friction between the tractor and trailer.
- Check if the fifth wheel is in the proper position for coupling.
  - Wheel tilted down towards rear of tractor.
  - Jaws open.
  - Safety unlocking handle in the automatic lock position.
- If you have a sliding fifth wheel, make sure it is locked.
- Make sure the trailer kingpin and apron are not bent, cracked or broken.

Step 2. Inspect Area and Chock Wheels

- Make sure the area around the vehicle is clear.
- Be sure trailer wheels are chocked or spring brakes are on.
- Check that cargo (if any) is secured against movement due to the tractor being coupled to the trailer.

Step 3. Position the Tractor

- Put the tractor directly in front of the trailer. Never back under the trailer at an angle because you might push the trailer sideways and break the landing gear.
- Check position, using outside mirrors, by looking down both sides of the trailer.

Step 4. Back Slowly

- Back until the fifth wheel just touches the trailer.
- Don't hit the trailer.

Step 5. Secure the Tractor

- Put on the parking brake.
- Put transmission in neutral.

Step 6. Check Trailer Height

- The trailer should be low enough that it is raised slightly by the tractor when the tractor is backed under it. Raise or lower the trailer as needed. If the trailer is too low, the tractor may strike and damage the nose of the trailer. If the trailer is too high, it may not couple correctly.
- Check that the kingpin and fifth wheel are aligned.

Step 7. Connect the Air Lines to the Trailer

- Check the glad hand seals and connect the tractor emergency air line to the trailer emergency glad hand.
- Check the glad hand seals and connect the tractor service air line to the trailer service glad hand.
- Make sure the air lines are safely supported where they won't be crushed or caught while the tractor is backing under the trailer.

Step 8. Supply Air to the Trailer

- From the cab, push in the "air supply" knob or move the tractor protection valve control from the "emergency" to the "normal" position to supply air to the trailer brake system.
- Wait until the air pressure is normal.
- Check the brake system for crossed air lines.
  - Shut the engine off so you can hear the brakes.
  - Apply and release the trailer brakes and listen for the sound of the trailer brakes being applied and released. You should hear the brakes move when they are applied and air escape when they are released.
  - Check the air brake system pressure gauge for signs of major air loss.
- When you are sure the trailer brakes are working, start the engine.
- Make sure air pressure is up to normal.

Step 9. Lock the Trailer Brakes

- Pull out the "air supply" knob or move the tractor protection valve control from "normal" to "emergency."

Step 10. Back Under the Trailer

- Use the lowest reverse gear.
- Back the tractor slowly under the trailer to avoid hitting the kingpin too hard.
- Stop when the kingpin is locked into the fifth wheel.

Step 11. Check the Connection for Security

- Raise the trailer landing gear **slightly** off the ground.
- Pull the tractor **gently** forward while the trailer brakes are still locked to check that the trailer is locked onto the tractor.

Step 12. Secure the Vehicle

- Put the transmission in neutral.
- Put the parking brakes on.
- Shut off the engine and take the key with you so someone else won't move truck while you are under it.

Step 13. Inspect the Coupling

- Use a flashlight, if necessary.
- Make sure there is no space between the upper and lower fifth wheel. If there is space, something is wrong (the kingpin may be on **top** of the closed fifth wheel jaws; the trailer would come loose very easily).
- Go under the trailer and look into the back of the fifth wheel. Make sure the fifth wheel jaws have closed around the shank of the kingpin (see Figure 6-7).

Figure 6-7 Trailer Kingpin

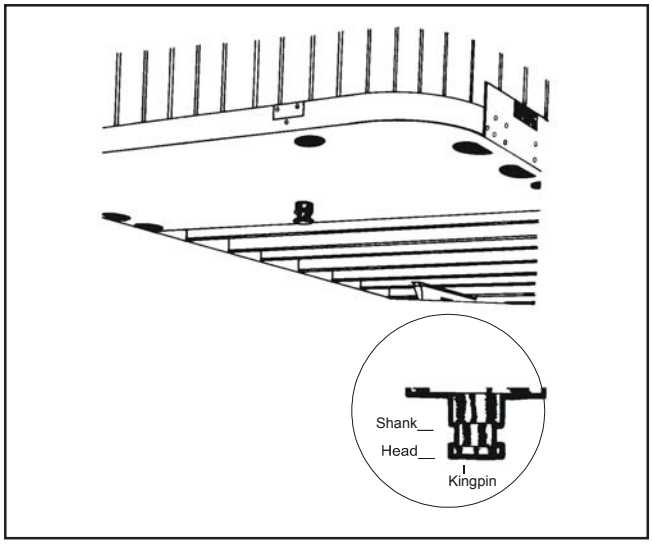

- Check that the locking lever is in the "lock" position.
- Check that the safety latch is in position over locking the lever. (On some fifth wheels the catch must be put in place by hand.)
- If the coupling isn't right, **don't drive the coupled unit**; get it fixed.

Step 14. Connect the Electrical Cord and Check the Air Lines

- Plug the electrical cord into the trailer and fasten the safety catch.
- Check both the air lines and the electrical line for signs of damage.
- Make sure the air and electrical lines will not hit any moving parts of vehicle.

Step 15. Raise the Front Trailer Supports (Landing Gear)

- Use low gear range (if so equipped) to begin raising the landing gear. Once free of weight, switch to the high gear range.
- Raise the landing gear all the way up. Never drive with the landing gear only part way up as it may catch on railroad tracks or other things.
- After raising the landing gear, secure the crank handle safely.
- When the full weight of the trailer is resting on the tractor:
  - Check for enough clearance between the rear of the tractor frame and the landing gear. (When the tractor turns sharply, it must not hit the landing gear.)
  - Check that there is enough clearance between the top of the tractor tires and the nose of the trailer.
  - Check for enough clearance between the rear of tractor and the front of the trailer. The sliding fifth wheel may need to be repositioned to avoid the tractor hitting the trailer during turns.

Step 16. Remove Trailer Wheel Chocks

- Remove and store the wheel chocks in a safe place.

UNCOUPLING THE TRACTOR-SEMITRAILER

The following steps will help you to uncouple safely:

Step 1. Position the Rig

- Make sure the surface of the parking area can support the weight of the trailer.
- Have the tractor lined up with the trailer. Pulling out at an angle can damage the landing gear.

Step 2. Ease Pressure on the Locking Jaws

- Shut off the trailer air supply to lock the trailer brakes.
- Ease the pressure on the fifth wheel locking jaws by backing up gently. This will help you release the fifth wheel locking lever.
- Put the parking brakes on while the tractor is pushing against the kingpin. This will hold the rig with pressure off the locking jaws.

Step 3. Chock the Trailer Wheels

- Chock the trailer wheels if the trailer doesn't have spring brakes, or if you're not sure. The air could leak out of the trailer air tank, releasing its emergency brakes. Without chocks, the trailer could move.

Step 4. Lower the Landing Gear

- If the trailer is empty, lower the landing gear until it makes firm contact with the ground.
- If the trailer is loaded, after the landing gear makes firm contact with the ground, turn the crank in low gear a few extra turns. This will lift some weight off the tractor. (Do not lift the trailer off the fifth wheel.) This will:
  - make it easier to unlatch the fifth wheel;
  - make it easier to couple the next time.

Step 5. Disconnect the Air Lines and Electrical Cable

- Disconnect the air lines from the trailer. Connect the air line glad hands to the dummy couplers at the back of the cab or couple them together.
- Hang the electrical cable with the plug down to prevent moisture from entering it.
- Make sure the lines are supported so they won't be damaged while driving the tractor.

Step 6. Unlock the Fifth Wheel

- Raise the release handle lock.
- Pull the release handle to the "open" position.
- Keep your legs and feet clear of the rear tractor wheels to avoid serious injury in case the vehicle moves.

Step 7. Pull the Tractor Partially Clear of the Trailer

- Pull the tractor forward until the fifth wheel comes out from under the trailer.
- Stop with the tractor frame under the trailer (prevents the trailer from falling to the ground if the landing gear should collapse or sink).

Step 8. Secure the Tractor

- Apply the parking brake.
- Place the transmission in neutral.

Step 9. Inspect the Trailer Supports

- Make sure the ground is supporting the trailer.
- Make sure the landing gear is not damaged.

Step 10. Pull the Tractor Clear of the Trailer

- Release the parking brakes.
- Check the area and drive the tractor forward until it clears.

Test Your Knowledge
1. What might happen if the trailer is too high when you try to couple? 2. After coupling, how much space should be between the upper and lower fifth wheel? 3. True or False? You should look into the back of the fifth wheel to see if it is locked onto the kingpin. 4. True or False? To drive, you need to raise the landing gear only until it just lifts off the pavement.
These questions may be on your test. If you are unable to answer them all, re-read Sections 6.3.

6.4 Inspecting a Combination Vehicle

Use the seven-step inspection procedure described in Section 2 to inspect your combination vehicle. There are more things to inspect on a combination vehicle than on a single vehicle. For example, tires, wheels, lights, reflectors, etc. However, there are also some new things to check. These are discussed below.

ADDITIONAL THINGS TO CHECK DURING A WALKAROUND INSPECTION

Do these checks in addition to those listed in Section 2, "Step 5: Do Walkaround Inspection."

Coupling System Areas

- Check the fifth wheel (lower).
  - Securely mounted to the frame.

- No missing, or damaged parts.
- Enough grease.
- No visible space between the upper and lower fifth wheel.
- Locking jaws are around the shank, **not** the head of the kingpin.
- Release arm is properly seated and the safety latch/lock engaged.

• Fifth wheel (upper).
- Apron is securely mounted to the trailer frame, not bent, cracked or broken.
- Kingpin is not damaged.

• Air and electric lines to the trailer.
- Electrical cord is firmly plugged in and is secured.
- Air lines are properly connected to the glad hands, there are no air leaks, and are properly secured with enough slack for turns.
- All lines are free from damage.

• Sliding fifth wheel.
- Slide is not damaged or there are parts missing.
- Properly greased.
- All locking pins are present and are locked in place.
- If air powered - there are no air leaks.
- Check that the fifth wheel is not so far forward the tractor frame will hit the landing gear, or the cab will hit the trailer during turns.

Landing Gear

• Fully raised, no missing parts, not bent or otherwise damaged.

• Crank handle is in place and is secured.

• If power operated, there are no air or hydraulic leaks.

Do these checks **in addition** to Section 5.3, Inspecting Air Brake Systems.

COMBINATION VEHICLE BRAKE CHECK

The following section explains how to check air brakes on combination vehicles. Check the brakes on a double or triple trailer as you would any combination vehicle.

Check that Air Flows to All Trailers. Use the tractor parking brake and/or chock the wheels to hold the vehicle. Wait for the air pressure to reach normal, then push in the red "trailer air supply" knob. This will supply air to the emergency (supply) lines. Use the trailer handbrake to provide air to the service line. Go to the rear of the rig. Open the emergency line shut-off valve at the rear of the last trailer. You should hear air escaping, showing the entire system is charged. Close the emergency line valve. Open the service line valve to check that service pressure goes through all the trailers (this test assumes the trailer handbrake or the service brake pedal is on), then close the valve. If you do NOT hear air escaping from both lines, check that the shut-off valves on the trailer(s) and dolly(s) are in the OPEN position. You MUST have air all the way to the back for all the brakes to work.

Test the Tractor Protection Valve. Charge the trailer air brake system. (That is, build up normal air pressure and push the "air supply" knob in). Shut the engine off. Step on and off the brake pedal several times to reduce the air pressure in the tanks. The trailer air supply control (also called the tractor protection valve control) should pop out (or go from "normal" to "emergency" position) when the air pressure falls into the pressure range specified by the manufacturer, usually within the range of 20 to 45 psi.

If the tractor protection valve doesn't work right, an air hose or trailer brake leak could drain all the air from the tractor. This would cause the emergency brakes to come on, with possible loss of control.

Test the Trailer Emergency Brakes. Charge the trailer air brake system and check that the trailer rolls freely. Then stop and pull out the trailer air supply control (also called the tractor protection valve control or trailer emergency valve) or place it in the "emergency" position. Pull gently on the trailer with the tractor to check that the trailer emergency brakes are on.

Test the Trailer Service Brakes. Check for normal air pressure, release the parking brakes, move the vehicle forward slowly, and apply the trailer brakes with the hand control (trolley valve), if so equipped. You should feel the brakes come on. This tells you the trailer brakes are connected and working. (The trailer brakes should be tested with the hand valve, but controlled in normal operation with the foot pedal, which applies air to the service brakes at all wheels.)

Note: Straight truck, passenger bus and combination vehicle inspection memory aids are located in Section 10.

Test Your Knowledge
1. Which shut-off valves should be open and which should be closed?
2. How can you test that air flows to all trailers?
3. How can you test the tractor protection valve?
4. How can you test the trailer emergency brakes?
5. How can you test the trailer service brakes?
These questions may be on your test. If you are unable to answer them all, re-read Sections 6.4.

Section 7: Doubles and Triples

This section covers:
- Pulling Double/Triple Trailers
- Coupling and Uncoupling
- Inspecting Doubles and Triples
- Checking Air Brakes

This section has information you need to pass the CDL knowledge test for driving safely with double and triple trailers. It tells about how important it is to be very careful when driving with more than one trailer, how to couple and uncouple correctly, and of inspecting doubles and triples carefully. (You should also study Sections 2, 5 and 6.)

7.1 Pulling Double/Triple Trailers

Take special care when pulling two and three trailers. There are more things that can go wrong, and doubles/triples are less stable than other commercial vehicles. Some areas of concern are discussed below.

PREVENT TRAILERS FROM ROLLING OVER

To prevent trailers from rolling over, you must steer gently and go slowly around corners, on-ramps, off-ramps, and curves. A safe speed on a curve for a straight truck or a single trailer combination vehicle may be too fast for double or triple trailers.

BEWARE OF THE CRACK-THE-WHIP EFFECT

Doubles and triples are more likely to turn over than other combination vehicles because of the "crack-the-whip" effect. You must steer gently when pulling trailers. The last trailer in a combination is most likely to turn over. If you don't understand the crack-the-whip effect, study section 6.1 and review Figure 6-1 in the Combination Vehicles section of this manual.

INSPECT COMPLETELY

There are more critical parts to check when you have two or three trailers. Check them all. Follow the procedures described later in this section.

LOOK FAR AHEAD

Doubles and triples must be driven very smoothly to avoid rollover or jackknife. Therefore, **look far ahead** so you can slow down or change lanes gradually when necessary.

MANAGE SPACE

Doubles and triples take up more space than other commercial vehicles. They are not only longer, but also need more space because they can't be turned or stopped suddenly. Allow more following distance. Make sure you have large enough gaps before entering or crossing traffic. Before changing lanes, be certain the lane is open, signal, check traffic and avoid sudden turning movements.

ADVERSE CONDITIONS

Be more careful in adverse conditions. In bad weather, slippery conditions, and mountain driving, you must be especially careful if you drive double and triple bottoms. You will have greater length and more dead axles to pull with your drive axles than other vehicles. There is more chance for skids and loss of traction.

7.2 Coupling and Uncoupling

Knowing how to couple and uncouple correctly is basic to safe operation of doubles and triples. Incorrect coupling and uncoupling can be very dangerous. Coupling and uncoupling steps for doubles and triples are listed below.

COUPLING TWIN TRAILERS

Secure the Second (Rear) Trailer

- If the second trailer doesn't have spring brakes, drive the tractor close to the trailer, connect the emergency line, charge the trailer air tank, and disconnect the emergency line. This will set the trailer emergency brakes (if the slack adjusters are correctly adjusted). Chock the wheels if you have any doubt about the brakes.

Couple the Tractor and First Semi-trailer as Described Earlier.

> **Caution:** For the safest handling on the road, the more heavily loaded semi-trailer should be in the first position behind the tractor. The lighter trailer should be in the rear.

A converter gear or dolly is a coupling device of one or two axles and a fifth wheel by which a semi-trailer can be coupled to the rear of a tractor-trailer combination forming a double bottom rig.

Position the Converter Dolly in Front of the Second (Rear) Trailer

- Release the dolly brakes by opening the air tank petcock. (Or, if the dolly has spring brakes, use the dolly parking brake control.)
- If the distance is not too great, roll the wheel dolly into position by hand so it is in line with the kingpin.
- Or, use the tractor and first semi-trailer to pick up the converter dolly:

- Position the combination as close as possible to the converter dolly.
- Move the dolly to the rear of the first semi-trailer and couple it to the trailer.
- Lock the pintle hook.
- Secure the dolly support in the raised position.
- Pull the dolly into position as close as possible to the nose of the second semi-trailer.
- Lower the dolly support.
- Unhook the dolly from the first trailer.
- Wheel the dolly into position in front of the second trailer in line with the kingpin.

Connect the Converter Dolly to the Front Trailer

- Back the first semi-trailer into position in front of the dolly tongue.
- Hook the dolly to the front trailer.
  - Lock the pintle hook.
  - Secure the converter gear support in the raised position.

Connect the Converter Dolly to the Rear Trailer

- Make sure the trailer brakes are locked and/or the wheels are chocked.
- Make sure the trailer height is correct. (It must be slightly lower than the center of the fifth wheel, so the trailer is raised slightly when the dolly is pushed under.)
- Back the converter dolly under the rear trailer.
- Raise the landing gear slightly off the ground to prevent damage if the trailer moves.
- Test the coupling by pulling against the pin of the second semi-trailer.
- Make a visual check of the coupling. (There should be no space between the upper and lower fifth wheel. The locking jaws should be closed on the kingpin.)
- Connect the safety chains, air hoses, and light cords.
- Close the converter dolly air tank petcock.
- Close the shut-off valves at the rear of the second trailer (service and emergency shut-offs).
- Open the shut-off valves at the rear of the first trailer (and on the dolly, if so equipped).
- Raise the landing gear completely.
- Charge the trailers (push the “air supply” knob in) and check for air at the rear of the second trailer by opening the emergency line shut-off. If air pressure isn’t there, something is wrong and the brakes won’t work.

UNCOUPLING TWIN TRAILERS

Uncouple the Rear Trailer

- Park the rig in a straight line on firm level ground.
- Apply the parking brakes so the rig won’t move.
- Chock the wheels of the second trailer if it doesn’t have spring brakes.
- Lower the landing gear of the second semi-trailer enough to remove some weight from the dolly.
- Close the air shut-offs at the rear of the first semi-trailer (and on the dolly, if so equipped).
- Disconnect all the dolly air and electric lines and secure them.
- Release the dolly brakes.
- Release the converter dolly fifth wheel latch.
- Slowly pull the tractor, first semi-trailer and dolly forward to pull the dolly out from under the rear semi-trailer.

Uncouple the Converter Dolly

- Lower the dolly landing gear.
- Disconnect the safety chains.
- Apply the converter gear spring brakes or chock the wheels.
- Release the pintle hook on the first semi-trailer.
- Slowly pull clear of the dolly.

Caution: Never unlock the pintle hook with the dolly still under the rear trailer. The dolly tow bar may fly up, possibly causing injury, and making it very difficult to re-couple.

COUPLING AND UNCOUPLING TRIPLE TRAILERS

Couple the Second and Third Trailers

- Couple the second and third trailers using the method for coupling doubles.
- Uncouple the tractor and pull away from the second and third trailers.

Couple the Tractor/First Semi-trailer to the Second/ Third Trailers

- Couple the tractor to the first trailer. Use the method already described for coupling tractor-semitrailers.

- Move the converter dolly into position and couple the first trailer to the second trailer using the method for coupling doubles. The triples rig is now complete.

Uncouple the Triple-Trailer Rig

- Uncouple the third trailer by pulling the dolly out, then unhitching the dolly using the method for uncoupling doubles.

- Uncouple the remainder of the rig as you would any double-bottom rig using the method already described.

COUPLING AND UNCOUPLING OTHER COMBINATIONS

The methods described so far apply to the more common tractor-trailer combinations. However, there are other ways of coupling and uncoupling the many types of truck-trailer and tractor-trailer combinations that are in use. There are too many to cover in this manual. Learn the right way to couple the vehicle(s) you will drive according to the manufacturer and/or owner.

7.3 Inspecting Doubles and Triples

Use the seven-step inspection procedure described in Section 2 to inspect your combination vehicle. There are more things to inspect on a combination vehicle than on a single vehicle. Many of these items are simply more of what you would find on a single vehicle. (For example, tires, wheels, lights, reflectors, etc.) However, there are also some new things to check. These are discussed below.

ADDITIONAL THINGS TO CHECK DURING A WALKAROUND INSPECTION

Coupling System Areas

- Check the fifth wheel (lower).
  - Securely mounted to the frame.
  - No missing or damaged parts.
  - Enough grease.
  - No visible space between the upper and lower fifth wheel.
  - Locking jaws are around the shank, **not** the head of kingpin.
  - Release arm is properly seated and the safety latch/lock is engaged.

- Fifth wheel (upper).
  - Apron is securely mounted to the trailer frame, not bent, cracked or broken.
  - Kingpin is not damaged.

- Air and electric lines to the trailer.
  - Electrical cord is firmly plugged in and is secured.
  - Air lines are properly connected to the glad hands, there are no air leaks, they are properly secured with enough slack for turns.
  - All lines are free from damage.

- Sliding fifth wheel.
  - Slide is not damaged or there are no parts missing.
  - Properly greased.
  - All locking pins are present and are locked in place.
  - If air powered, there are no air leaks.
  - Check that fifth wheel is not so far forward the tractor frame will hit the landing gear, or the cab will hit the trailer during turns.

Landing Gear

- Fully raised, there are no missing parts, it is not bent or otherwise damaged.

- Crank handle is in place and is secured.

- If power operated, there are no air or hydraulic leaks.

Double and Triple Trailers

- Shut-off valves (at the rear of trailers, in the service and emergency lines):
  - Rear of front trailers: OPEN.
  - Rear of last trailer: CLOSED.
  - Converter dolly air tank drain valve: CLOSED.

- Be sure the air lines are supported and the glad hands are properly connected.

- If the spare tire is carried on the converter gear (dolly), make sure it is secured.

- Be sure the pintle-eye of the dolly is in place in the pintle hook of the trailer(s).

- Make sure the pintle hook is latched.

- Safety chains should be secured to the trailer(s).

- Be sure light cords are firmly in the sockets on trailers.

Do these checks **in addition** to Section 5.3, “Inspecting Air Brake Systems.”

7.4 Doubles/Triples Air Brake Check

Check the brakes on a double or triple trailer as you would any combination vehicle. Section 6.2 explains how to check air brakes on combination vehicles. You must also make the following checks on your double or triple trailers:

CHECK THAT AIR FLOWS TO ALL TRAILERS (DOUBLE AND TRIPLE TRAILERS)

Use the tractor parking brake and/or chock the wheels to hold the vehicle. Wait for air pressure to reach normal,

then push in the red “trailer air supply” knob. This will supply air to the emergency (supply) lines. Use the trailer handbrake to provide air to the service line. Go to the rear of the rig. Open the emergency line shut-off valve at the rear of the last trailer. You should hear air escaping, showing the entire system is charged. Close the emergency line valve. Open the service line valve to check that service pressure goes through all the trailers (this test assumes that the trailer handbrake or the service brake pedal is on), then close the valve. If you do NOT hear air escaping from both lines, check that the shut-off valves on the trailer(s) and dolly(s) are in the OPEN position. You MUST have air all the way to the back for all the brakes to work.

TEST THE TRACTOR PROTECTION VALVE

Charge the trailer air brake system. (That is, build up normal air pressure and push the “air supply” knob in.) Shut the engine off. Step on and off the brake pedal several times to reduce the air pressure in the tanks. The trailer air supply control (also called the tractor protection valve control) should pop out (or go from the “normal” to “emergency” position) when the air pressure falls into the pressure range specified by the manufacturer, usually within the range of 20 to 45 psi.

If the tractor protection valve doesn’t work right, an air hose or trailer brake leak could drain all the air from the tractor. This would cause the emergency brakes to come on, with possible loss of control.

TEST TRAILER EMERGENCY BRAKES

Charge the trailer air brake system and check that the trailer rolls freely. Then stop and pull out the trailer air supply control (also called tractor protection valve control or trailer emergency valve) or place it in the “emergency” position. Pull gently on the trailer with the tractor to check that the trailer emergency brakes are on.

TEST TRAILER SERVICE BRAKES

Check for normal air pressure, release the parking brakes, move the vehicle forward slowly, and apply trailer brakes with the hand control (trolley valve), if so equipped. You should feel the brakes come on. This tells you the trailer brakes are connected and working. The trailer brakes should be tested with the hand valve, but controlled in normal operation with the foot pedal, which applies air to the service brakes at all wheels.

Test Your Knowledge

1. What is a converter dolly?
2. Do converter dollies have spring brakes?
3. What three methods can you use to secure a second trailer before coupling?
4. How do you check to make sure trailer height is correct before coupling?
5. What do you check when making a visual check of coupling?
6. Why should you pull a dolly out from under a trailer before you disconnect it from the trailer in front?
7. What should you check for when inspecting the converter dolly? The pintle hook?
8. Should the shut-off valves on the rear of the last trailer be open or closed? On the first trailer in a set of doubles? On the middle trailer of a set of triples?
9. How can you test that air flows to all trailers?

These questions may be on your test. If you are unable to answer them all, re-read Sections 7.1, 7.2, 7.3 and 7.4.

Section 8: Tank Vehicles

This section covers:
- Inspecting Tank Vehicles
- Driving Tank Vehicles

This section has information needed to pass the CDL knowledge test for driving a tank vehicle. (You should also study Sections 2, 5, and 6). A "tank vehicle" is a vehicle used to transport any liquid or liquified gaseous material in a permanently or temporarily attached tank, or a portable tank having a rated capacity of 1000 gallons or more.

Before loading, unloading, or driving a tanker, inspect the vehicle. This ensures the vehicle is safe to carry the liquid or gas and is safe to drive.

8.1 Inspecting Tank Vehicles

Tank vehicles have special items that you need to check. Tank vehicles come in many types and sizes. You need to check the vehicle operator's manual to make sure you know how to inspect your tank vehicle.

LEAKS

On all tank vehicles, the most important item to check for is leaks. Check under and around the vehicle for signs of any leaking. Do not carry liquids or gases in a leaking tank. In general, check the following:

- The tank's body or shell for dents or leaks.
- The intake, discharge, and cut-off valves. Make sure the valves are in the correct position before loading, unloading, or moving the vehicle.
- Pipes, connections, and hoses for leaks, especially around joints.
- Manhole covers and vents. Make sure the covers have gaskets and they close correctly. Keep the vents clear so they work correctly.
- Special purpose equipment. If your vehicle has any of the following equipment, make sure it works:
  - Vapor recovery kits.
  - Grounding and bonding cables.
  - Emergency shut-off systems.
  - Built in fire extinguisher.

Make sure you know how to operate your special equipment.

Check the emergency equipment required for your vehicle. Find out what equipment you are required to carry and make sure you have it and that it works.

8.2 Driving Tank Vehicles

Hauling liquids in tanks requires special skills because of the high center of gravity and liquid movement.

HIGH CENTER OF GRAVITY

High center of gravity means that much of the load's weight is carried high up off the road. This makes the vehicle top-heavy and easy to roll over. Liquid tankers are especially easy to roll over. Tests have shown that tankers can turn over at the speed limits posted for curves. Take highway curves and on-ramp/off-ramp curves well below the posted speeds.

DANGER OF SURGE

Liquid surge results from movement of the liquid in partially filled tanks. This movement can have adverse effects on handling. For example, when coming to a stop, the liquid will surge back and forth. When the wave hits the end of the tank, it tends to push the truck in the direction the wave is moving. If the truck is on a slippery surface such as ice, the wave can shove a stopped truck into motion. The driver of a liquid tanker must be very familiar with the handling of the vehicle.

BULKHEADS

Some liquid tanks are divided into several smaller tanks by bulkheads. When loading and unloading the smaller tanks, the driver must pay attention to weight distribution. Do not put too much weight on the front or rear of the vehicle.

BAFFLED TANKS

Baffled liquid tanks have bulkheads in them with holes that let the liquid flow through. The baffles help to control the forward and backward liquid surge. However, side-to-side surge can still occur. This can cause a roll over.

UN-BAFFLED TANKS

Un-baffled liquid tankers (sometimes called "smooth bore" tanks) have nothing inside to slow down the flow of the liquid. Therefore, forward-and-back surge is very strong. Un-baffled tanks are usually those that transport food products (milk, for example). Sanitation regulations forbid the use of baffles because of the difficulty in cleaning the inside of the tank. Be extremely cautious (slow and careful) in driving smooth bore tanks, especially when starting and stopping.

OUTAGE

Never load a cargo tank totally full. Liquids expand as they warm and you must leave room for the expanding liquid. This is called "outage". Since different liquids expand by different amounts, they require different amounts of outage. You must know the outage requirement when hauling liquids in bulk.

HOW MUCH TO LOAD?

A full tank of dense liquid (such as some acids) may exceed legal weight limits. For that reason, you may often only partially fill tanks with heavy liquids. The amount of liquid to load into a tank depends on:

- The amount the liquid will expand in transit.
- The weight of the liquid.
- Legal weight limits.

8.3 Safe Driving Rules

In order to drive tank vehicles safely, you must remember to follow all the safe driving rules. A few of these rules are:

DRIVE SMOOTHLY

Because of the high center of gravity and the surge of the liquid, you must start, slow down, and stop very smoothly. Also, make smooth turns and lane changes.

BRAKING

If you must make a quick stop to avoid a crash, use controlled or stab braking. If you do not remember how to stop using these methods, review Section 2.13. Also, remember if you steer quickly while braking, your vehicle may roll over.

SHIFTING CARGO A PROBLEM WITH PARTIAL LOADS

Tank drivers say that liquid cargo shifting is a problem with "anything other than full or empty." This condition occurs when the driver makes sudden lane changes, takes evasive action, and on long downward curves. A prime location for this condition to develop is at freeway exit and entrance ramps.

EXIT RAMPS ESPECIALLY DANGEROUS

Here is an example of how an accident can begin. A driver is making a right turn off a freeway onto a 25-mph ramp from the right lane, and is watching the traffic ahead and behind. He has the right turn indicator on, and gears down to around 40 mph as he enters the off-ramp traffic. He brakes slightly and is already eyeing the traffic stream he will be entering, which is proceeding under the freeway. The ramp traffic is slowing. He drops to a lower gear and applies a little more braking. He feels the right side of the rig start to "float." Then he remembers he has two empty middle compartments and two half-full ones, No. 1 and No. 4. If he steers left to correct, he will jump the curb right into the underpass traffic. If he brakes sharply and stays in the ramp traffic, the leftward shifting of his load could be accentuated and eventually overturn the tank.

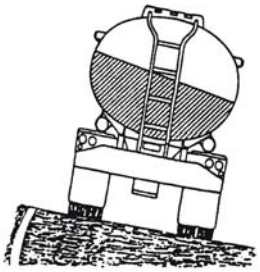

There is no textbook solution, only time and whatever action the driver takes in hopes the load shifting will be overcome by the weight of the tractor and trailer as rig speed is reduced.

BE CAREFUL WITH PARTIAL LOADS

Even though full or empty runs occur much more frequently than partial loads, there is, and will continue to be, need for partial loads. The special handling requires full awareness at all times of the changes in vehicle characteristics that can only be accomplished by lower speed, more careful braking, load distribution and direction changes.

SLOW BEFORE TURNS

If you are already in the turn, it may be too late to slow down safely. Therefore, the best solution is to be especially watchful and **slow down before entering the turn.**

STOPPING DISTANCE

Keep in mind how much space you need to stop your vehicle. Remember that wet roads double the normal stopping distance. Empty tank vehicles may take longer to stop than full ones.

SKIDS

Do not over steer, over accelerate, or over brake. If you do, your vehicle may skid. On tank trailers, if your drive wheels or trailer wheels begin to skid, your vehicle may jackknife. When any vehicle starts to skid, you must take action to restore traction to the wheels.

Test Your Knowledge
1. How are bulkheads different than baffles?
2. Should a tank vehicle take curves, on-ramps, or off-ramps at the posted speed limits?
3. How are smooth bore tankers different to drive than those with baffles?
4. What three things determine how much liquid you can load?
5. What is outage?
6. What two reasons make special care necessary when driving tank vehicles?
These questions may be on your test. If you are unable to answer them all, re-read Sections 8.2.

PART THREE

10. Pre-Trip Vehicle Inspection Test

Note: (Part 10.3 School Bus is in Volume II)

11. Basic Vehicle Control Skills Test

12. On Road Driving Test

THIS PART IS FOR DRIVERS
WHO NEED TO TAKE A SKILLS TEST

Section 10: Pre-Trip Vehicle Inspection Test

This section covers:
- Internal and External Inspections

During the pre-trip inspection, you must show that the vehicle is safe to drive. You will have to walk around the vehicle and point to or touch each item and explain to the examiner what you are checking and why. You will NOT have to crawl under the hood or under the vehicle.

10.1 All Vehicles

Study the following vehicle parts for the type of vehicle you will be using during the CDL skills tests. You will need to identify each part and tell the examiner what you are looking for or inspecting.

ENGINE COMPARTMENT (ENGINE OFF)

Leaks/Hoses

- Look for puddles on the ground.
- Look for dripping fluids on the underside of the engine and transmission.
- Inspect hoses for condition and leaks.

Oil Level

- Indicate where the dipstick is located.
- Make sure the oil level is within safe operating range. The level must be above the refill mark.

Coolant Level

- Inspect the reservoir sight glass, or
- If the engine is not hot, remove the radiator cap and check for visible coolant level.

Power Steering Fluid

- Indicate where the power steering fluid dipstick is located.
- Check for adequate power steering fluid level. The level must be above the refill mark.

Engine Compartment Belts

- Check the following belts for snugness (up to 3/4 inch play at center of belt), cracks, or frays:
  - Power steering belt.
  - Water pump belt.
  - Alternator belt.
  - Air compressor belt.

Note: If any of the components listed above are not belt driven, you must:

- Tell the examiner which component(s) are not belt driven.
- Make sure the component(s) are operating properly, are not damaged or leaking, and are **mounted securely**.

Cab Check/Engine Start

Clutch/Gearshift

- Depress the clutch.
- Place the gearshift lever in neutral (or park, for automatic transmissions).
- Start the engine, then release the clutch slowly.

Oil Pressure Gauge

- Make sure the oil pressure gauge is working.
- Check that the pressure gauge shows increasing or normal oil pressure, or that the warning light goes off.
- If equipped, the oil temperature gauge should begin a gradual rise to the normal operating range.

Temperature Gauge

- Make sure the temperature gauge is working.
- The temperature should begin to climb to the normal operating range or the temperature light should be off.

Ammeter/Voltmeter

- Check that the gauges show the alternator and/or generator is charging or that the warning light is off.

Air/Vacuum Gauge

- Check for proper operation of, and acceptable readings on the air and/or vacuum gauge(s). See Air Brake Check.

WISCONSIN

Speedometer

- The speedometer should be present, not obscured or obviously broken.

WISCONSIN

Mirrors and Windshield

- Mirrors should be clean and adjusted properly from the inside.
- Windshield should be clean with no illegal stickers, obstructions, or damage to the glass.

Emergency Equipment

- Check for spare electrical fuses.
- Check for three red reflective triangles.
- Check for a properly charged and rated fire extinguisher.

> **Note:** If the vehicle is not equipped with electrical fuses, you must mention this to the examiner.

Steering Play

- **Non-power steering:** Check for excessive play by turning the steering wheel back and forth. Play should not exceed 10 degrees (or about two inches on a 20-inch wheel).
- **Power steering:** With the engine running, check for excessive play by turning the steering wheel back and forth. Play should not exceed 10 degrees (or about two inches on a 20-inch wheel) before the front left wheel barely moves.

Wipers/Washers

- Check that wiper arms and blades are secure, not damaged, and operate smoothly.
- If equipped, windshield washers must operate correctly.

Lighting Indicators

- Test that dash indicators work when the corresponding lights are turned on:
  - Left turn signal.
  - Right turn signal.
  - 4-way emergency flashers.
  - High beam headlight.

Horn

- Check that air horn and/or electric horn work.

Heater/Defroster

- Test that the heater and defroster works.

Parking Brake Check

- Apply parking brake **only** and make sure it will hold the vehicle by shifting into a lower gear and gently pulling against the brake.

Hydraulic Brake Check

- With the engine running, apply firm pressure to the service (foot) brake pedal and hold for five seconds. The brake pedal should not move (depress) during the five seconds.
- If equipped with a hydraulic brake reserve (back-up) system, with the key off, depress the brake pedal and listen for the sound of the reserve system electric motor.
- Check that the warning buzzer and/or light is off.
- Check the service (foot) brake operation by moving the vehicle forward slowly (about 5 mph) and apply the brake firmly. Note any vehicle “pulling” to one side, unusual feel or delayed stopping action.

Air Brake Check (air brake equipped vehicles only)

Failure to perform an air brake check will result in an automatic failure of the Vehicle Pre-trip Inspection Test.

Air brake safety devices vary. However, this procedure is designed to see that any safety device operates correctly as air pressure drops from normal to a low air condition. For safety purposes, in areas where an incline is present, you will need to use wheel chocks during the air brake check. The proper procedures for inspecting the air brake system are as follows:

Test Air Leakage Rate (**Static check**). With a fully-charged air system (typically 120 psi), turn off the engine, chock the wheels, release (push in) the parking brake button (all vehicles) and trailer air supply button (for combination vehicles) and time the air pressure drop. After the initial pressure drop, the loss rate should be no more than 2 psi in one minute for single vehicles and no more than 3 psi in one minute for combination vehicles.

(L) - LEAKS

Test Air Brake System for Leaks. With parking brake, (all vehicles) and trailer air supply button (for combination vehicles) released (pushed in), apply firm pressure to the service brake pedal. Watch the air supply gauge and listen for leaks. After the initial pressure drop, the loss rate for single vehicles should be no more than 3 psi in one minute and no more than 4 psi in one minute for combination vehicles. If the air loss rate exceeds these figures, have the air system repaired before operating.

(A) - ALARM

Test Low Pressure Warning Alarm and/or Signal. Turn the key to the on position. Rapidly apply and release the service brake pedal to reduce air tank pressure. The low air pressure warning signal must come on before

the pressure drops to less than 60 psi in the air tank.

If the warning alarm/signal doesn't work, you could be losing air pressure without knowing it. This could cause the spring brakes to activate suddenly. Only limited braking can be done before the spring brakes come on.

(B) - BUTTON(S)

Check That the Spring Brakes Come on Automatically. Continue to rapidly apply and release the service brake pedal to further reduce air tank pressure. The trailer air supply button (if it is a combination vehicle) and parking brake button should pop out when the air pressure falls to the manufacturer's specification (usually between 20 to 40 psi). This causes the spring brakes to come on.

Check Rate of Air Pressure Buildup. When the engine is operating at 1800 RPM, the pressure should build from 85 to 100 psi within 45 seconds in dual air systems. (If the vehicle has larger than minimum air tanks, the buildup time can be longer and still be safe. Check the manufacturer's specifications.)

If air pressure does not build up fast enough, your pressure may drop too low during driving, requiring an emergency stop. Don't drive until you get the problem fixed.

Test Service Brakes. Wait for normal air pressure, release the parking brake and trailer air supply button (for combination vehicles), move the vehicle forward slowly (about 5 mph), and apply the brakes firmly using the brake pedal. Note any vehicle "pulling" to one side, unusual feel, or delayed stopping action.

This test may show you problems which you otherwise wouldn't know about until you needed the brakes on the road.

> **Note:** The driver must locate and identify all air brake components, perform the LAB (leaks, alarm and button(s)) correctly and check the service (foot) brake operation to pass the pre-trip inspection.

Safety Belt

- Check that the safety belt is securely mounted, adjusts, and latches properly.

Lights/Reflectors

- Check that all external lights and reflective equipment are clean and functional. Light and reflector checks include:
  - Clearance lights (red on rear, amber elsewhere).
  - Headlights (high and low beams).
  - Taillights.
  - Turn signals.
  - 4-way flashers.
  - Brake lights.
  - Red reflectors (on rear) and amber reflectors (elsewhere).

> **Note:** Checking the brake, turn signal and four-way flasher functions must be done separately. You may ask the examiner for help checking lights.

10.2 External Inspection (Passenger Bus/ Truck/Tractor)

STEERING

Steering Box/Hoses

- Check that the steering box is securely mounted and not leaking. Look for any missing nuts, bolts, and cotter keys.
- Check for power steering fluid leaks or damage to power steering hoses.

Steering Linkage

- See that connecting links, arms, and rods **from the steering box to the wheel** are not worn or cracked.
- Check that joints and sockets are not worn or loose and that there are no missing nuts, bolts, or cotter keys.

SUSPENSION

Springs/Air/Torque

- Look for missing, shifted, cracked, or broken leaf springs.
- Look for broken or distorted coil springs.
- If the vehicle is equipped with torsion bars, torque arms, or other types of suspension components, check that they are not damaged and are mounted securely.
- Air ride suspension should be checked for damage and leaks.

Mounts

- Look for cracked or broken spring hangers, missing or damaged bushings, and broken, loose, or missing bolts, U-bolts or other axle mounting parts. (The mounts should be checked at each point where they are secured to the vehicle frame and axle(s)). This includes mounts used for air ride systems.

Shock Absorbers

- See that shock absorbers are secure and that there are no leaks.

Note: Be prepared to perform the same suspension components inspection on every axle (power unit and trailer, if equipped).

BRAKES

Slack Adjustors

- Look for broken, loose, or missing parts.
- The angle between the push rod and adjustor arm should be a little over 90 degrees when the brakes are released, and not less than 90 degrees when the brakes are applied.
- When pulled by hand, the brake rod should not move more than one inch (with the brakes released).

Brake Chambers

- See that brake chambers are not leaking, cracked, or dented and are mounted securely.

Brake Hoses/Lines

- Look for cracked, worn, or leaking hoses, lines, and couplings.

Drum Brake or Rotor

- Check for cracks, dents, or holes. Also check for loose or missing bolts.
- Brake linings or pads (where visible) should not be worn dangerously thin.

Brake Linings

- On some brake drums, there are openings where the brake linings can be seen from outside the drum. For this type of drum, check that a visible amount of brake lining is showing.

Note: Be prepared to perform the same brake components inspection on every axle (power unit and trailer, if equipped).

WHEELS

Rims

- Check for damaged or bent rims. Rims cannot have welding repairs.

Tires

- The following items must be inspected on every tire:
  - **Tread depth:** Check for minimum tread depth (4/32 on steering axle tires, 2/32 on all other tires).
  - **Tire condition:** Check that tread is evenly worn and look for cuts or other damage to tread or sidewalls. Also, make sure valve caps and stems are not missing, broken, or damaged.
  - **Tire inflation:** Check for proper inflation by using a tire gauge, or inflation by striking tires with a mallet or other similar device.

Hub Oil Seals/Axle Seals

- See that hub oil/grease seals and axle seals are not leaking and, if wheel has a sight glass, oil level is adequate.

Lug Nuts

- Check that all lug nuts are present, free of cracks and distortions, and show no signs of looseness such as rust trails or shiny threads.
- Make sure all bolt holes are not cracked or distorted.

Spacers

- If equipped, check that spacers are not bent, damaged, or rusted through.
- Spacers should be evenly centered, with the dual wheels and tires evenly separated.

Note: Be prepared to perform the same wheel inspection on every axle (power unit and trailer, if equipped).

SIDE OF VEHICLE

Door(s)/Mirror(s)

- Check that door(s) are not damaged and that they open and close properly from the outside.
- Hinges should be secure with seals intact.
- Check that mirror(s) and mirror brackets are not damaged and are mounted securely with no loose fittings.

Fuel Tank

- Check that tank(s) are secure, cap(s) are tight, and there are no leaks from tank(s) or lines.

Battery/Box

- Wherever located, see that battery(s) are secure, connections are tight, and cell caps are present.

- Battery connections should not show signs of excessive corrosion.
- Battery box and cover or door must be secure.

Drive Shaft

- See that drive shaft is not bent or cracked.
- Couplings should be secure and free of foreign objects

Exhaust System

- Check system for damage and signs of leaks such as rust or carbon soot.
- System should be connected tightly and mounted securely.

Frame

- Look for cracks, broken welds, holes or other damage to the longitudinal frame members, cross members, box, and floor.

REAR OF VEHICLE

Splash Guards

- If equipped, check that splash guards or mud flaps are not damaged and are mounted securely.

Doors/Ties/Lifts

- Check that doors and hinges are not damaged and that they open, close, and latch properly from the outside, if equipped.
- Ties, straps, chains, and binders must also be secure.
- If equipped with a cargo lift, look for leaking, damaged or missing parts and explain how it should be checked for correct operation.
- Lift must be fully retracted and latched securely.

TRACTOR/COUPLING

Air/Electric Lines

- Listen for air leaks. Check that air hoses and electrical lines are not cut, chafed, spliced, or worn (steel braid should not show through).
- Make sure air and electrical lines are not tangled, pinched, or dragging against tractor parts.

Catwalk

- Make sure the catwalk is solid, clear of objects, and securely bolted to tractor frame.

Mounting Bolts

- Look for loose or missing mounting brackets, clamps, bolts, or nuts. Both the fifth wheel and the slide mounting must be solidly attached.
- On other types of coupling systems (i.e., ball hitch, pintle hook, tow bars, tow bar eye, etc.), inspect all coupling components and mounting brackets for missing or broken parts.

Locking Jaws

- Look into fifth wheel gap and check that locking jaws are fully closed around the kingpin.
- On other types of coupling systems (i.e., ball hitch, pintle hook, etc.), inspect the locking mechanism for missing or broken parts and make sure it is locked securely. If present, safety cables or chains must be secure and free of kinks and excessive slack (locking pin, safety latch, chains and brackets).

Platform (fifth wheel)

- Check for cracks or breaks in the platform structure which supports the fifth wheel skid plate.

Release Arm (fifth wheel)

- If equipped, make sure the release arm is in the engaged position and the safety latch is in place.

Kingpin/Apron/Gap

- Check that the kingpin is not bent.
- Make sure the visible part of the apron is not bent, cracked, or broken.
- Check that the trailer is laying flat on the fifth wheel skid plate (no gap).

Locking Pins (fifth wheel)

- If equipped, look for loose or missing pins in the slide mechanism of the sliding fifth wheel. If air powered, check for leaks.
- Make sure locking pins are fully engaged.
- Check that the fifth wheel is positioned properly so the tractor frame will clear the landing gear and the tractor will not strike the trailer during turns.

10.4 Trailer

Air/Electrical Connections

- Check that trailer air connectors are sealed and in good condition.
- Make sure glad hands are locked in place, free of damage or air leaks.
- Make sure the trailer electrical plug is firmly seated and locked in place.

Header Board

- If equipped, check the header board to see that it is secure, free of damage, and strong enough to contain cargo.
- If equipped, the canvas or tarp carrier must be mounted and fastened securely.
- On enclosed trailers, check the front area for signs of damage such as cracks, bulges, or holes.

SIDE OF TRAILER

Landing Gear

- Check that the landing gear is fully raised, has no missing parts, crank handle is secure, and the support frame is not damaged.
- If power operated, check for air or hydraulic leaks.

Doors/Ties/Lifts

- If equipped, check that doors are not damaged. Check that doors open, close, and latch properly from the outside.
- Check that ties, straps, chains, and binders are secure.
- If equipped with a cargo lift, look for leaking, damaged or missing parts and explain how it should be checked for correct operation.
- Lift should be fully retracted and latched securely.

Frame

- Look for cracks, broken welds, holes or other damage to the frame, cross members, box, and floor.

Tandem Release Arm/Locking Pins

- If equipped, make sure the locking pins are locked in place and release arm is secured.

REMAINDER OF TRAILER

Remainder of Trailer

- Please refer to Section 10.2 of this manual for detailed inspection procedures regarding the following components:
  - Wheels.
  - Suspension system.
  - Brakes.
  - Doors/Ties/Lift.
  - Splash Guards.

10.5 Coach/Transit Bus

Passenger Entry/Lift

- Check that entry doors operate smoothly and close securely from the inside.
- Check that hand rails are secure and, if equipped, the step light(s) are working.
- Check that the entry steps are clear, with the treads not loose or worn excessively.
- If equipped with a lift for the disabled, look for any leaking, damaged or missing part, and explain how it should be checked for correct operation.
- Lift should be fully retracted and latched securely.

Emergency Exits

- Make sure all emergency exits are not damaged, operate smoothly, and close securely from the inside.
- Check that any emergency exit warning devices are working.

Passenger Seating

- Look for broken seat frames and check that seat frames are firmly attached to the floor.
- Check that seat cushions are attached securely to the seat frames.

ENTRY/EXIT

Doors/Mirrors

- Check that entry/exit doors are not damaged and operate smoothly from the outside. Hinges should be secure with seals intact.
- Make sure the passenger exit door mirrors and all external mirrors and mirror brackets are not damaged and are mounted securely with no loose fittings.

EXTERNAL INSPECTION OF COACH/TRANSIT BUS

Level/Air Leaks

- See that the vehicle is sitting level (front and rear), and if air-equipped, check for audible air leaks from the suspension system.

Fuel Tank(s)

- See that fuel tank(s) are secure with no leaks from tank(s) or lines and the fuel cap is tight.

Compartments

- Check that baggage and all other exterior compartment doors are not damaged, operate properly, and latch securely.

Battery/Box

- Wherever located, see that battery(s) are secure, connections are tight, and cell caps are present.
- Battery connections should not show signs of excessive corrosion.
- Check that battery box and cover or door is not damaged and is secure.

REMAINDER OF COACH/TRANSIT BUS

Remainder of Vehicle

- Please refer to Section 10.2 of this manual for detailed inspection procedures regarding the following components:
  - Wheels.

Note: All drivers may use this aid during their pre-trip inspection test. Be prepared to point to or touch the listed items and explain "what" you would look for.

Note: Shaded components will not be required on the pre-trip inspection test, but should be checked on a daily basis.

ENGINE COMPARTMENT

- alternator mounted securely & belt *
- water pump mounted securely & belt *
- air compressor mounted securely & belt *
  * if gear driven, mention to the examiner
- coolant, oil, and power steering levels
- leaks and hoses

VEHICLE FRONT

- steering box and steering linkage
- springs and spring mounts
- shock absorber
- brake hose or line
- brake drum or rotor
- tire and rim
- lug nuts and hub oil seal

  If air brake equipped
  - brake hose
  - slack adjustor
  - brake chamber

VEHICLE SIDE

- mirror and passenger entry
- fuel tank mounted securely, leaks and cap
- frame and drive shaft
- exhaust
- battery and/or baggage door
- springs or air bag
- spring mounts or air bag mounts
- shock absorber
- brake hose or line
- brake drum or rotor
- tires and rim
- spacer
- lug nuts and hub oil seal

VEHICLE SIDE (CONTINUED)

If air brake equipped

- brake hose
- slack adjustor
- brake chamber

VEHICLE REAR

- doors and hinges (bus emergency exit)
- splash guards and reflectors

VEHICLE LIGHTS

- headlights (high and low beam)
- front signals and 4-way flashers
- front clearance
- side clearance and reflectors
- rear tail
- rear signals and 4-way flashers
- rear clearance
- brake lights

INSIDE VEHICLE

- clutch (depressed) and gearshift (neutral)
- all gauges (oil, voltmeter, air/vacuum, etc.)
- speedometer
- light indicators
- steering wheel play
- horn and wipers
- mirrors adjusted and windshield condition
- heater and defroster
- safety/emergency equipment
- emergency exit(s), buzzer(s) and seating
- parking brake
- brake system check (see back side of this page for correct procedure)
- service (foot) brake check (see back side of this page for correct procedure)

Note: All drivers are required to complete a brake system check correctly in order to pass their pre-trip inspection. The correct process is listed below according to the vehicles braking system.

BRAKE SYSTEM CHECK FOR HYDRAULIC BRAKES
If the vehicle has hydraulic brakes, with the engine running, apply firm pressure to the service (foot) brake pedal and hold for five seconds. The brake pedal should not move.

BRAKE SYSTEM CHECK FOR AIR BRAKES
If the vehicle has air brakes, you will need to check for leaks (L), warning alarm/signal (A) and for the button (B). This test is commonly referred to as the LAB inspection.

(L) - LEAKS
With a fully charged air system (typically 120 psi), turn off the engine, chock the wheels, release (push in) the parking brake button. Apply firm pressure to the service (foot) brake pedal. Watch the air supply gauge and listen for air leaks. After the initial pressure drop, the loss rate for single vehicles should be no more than 3 psi in one minute. If the air loss rate exceeds that figure, your air brake system will need to be repaired prior to continuing with the skills test.

(A) - ALARM/SIGNAL
Turn the key to the on position. Rapidly apply and release (fanning) the service (foot) brake pedal to reduce air tank pressure. The low air pressure warning signal (light, buzzer, etc.) must come on before the pressure drops to less than 60 psi in the air tank.

(B) - BUTTON
Continue to rapidly apply and release (fanning) the service (foot) brake pedal to further reduce air tank pressure. The parking brake button should pop out when the air pressure falls to the manufacturer's specification (usually between 20 to 40 psi). This causes the spring brakes to come on.

TEST SERVICE (FOOT) BRAKES PRIOR TO OPERATING
If your vehicle has **air brakes**, build up your air pressure to normal operating range (typically 120 psi), release (push in) the parking brake button. Move forward slowly (about 5 mph), and apply the service (foot) brake pedal firmly. Note any vehicle "Pulling" to one side, unusual feel, or delayed stopping action.

If your vehicle has **hydraulic brakes**, move forward slowly (about 5 mph), and apply the service (foot) brake pedal firmly. Note any vehicle "Pulling" to one side, unusual feel or delayed stopping action.

Note: If your vehicle is air brake equipped, you must locate and identify all air brake system components, test your service brakes and correctly perform the LAB in order to pass the air brake portion of the pre-trip inspection.

Note: All drivers may use this aid during their pre-trip inspection test. Be prepared to point to or touch the listed items and explain "what" you would look for.

ENGINE COMPARTMENT

- alternator mounted securely & belt *
- water pump mounted securely & belt *
- air compressor mounted securely & belt *
  * if gear driven, mention to the examiner
- coolant, oil and power steering levels
- leaks and hoses

VEHICLE FRONT

- steering box and steering linkage
- springs and spring mounts
- shock absorber
- brake hose or line
- brake drum or rotor
- tire and rim
- lug nuts and hub oil seal
  If air brake equipped
  - brake hose
  - slack adjustor
  - brake chamber

VEHICLE SIDE

- door and mirror
- fuel tank mounted securely, leaks and cap
- frame and drive shaft
- exhaust
- battery and/or baggage door for buses
- springs or air bag
- spring mounts or air bag mounts
- shock absorber
- brake hose or line
- brake drum or rotor
- tires and rim
- spacer
- lug nuts and hub oil seal
  If air brake equipped
  - brake hose
  - slack adjustor
  - brake chamber

VEHICLE REAR

- doors and hinges
- splash guards and reflectors

VEHICLE LIGHTS

- headlights (high & low beam)
- front signals and 4-way flashers
- front clearance
- side clearance & reflectors
- rear tail
- rear signals and 4-way flashers
- rear brake lights
- rear clearance

INSIDE VEHICLE

- clutch (depressed) and gearshift (neutral)
- all gauges (oil, voltmeter, air/vacuum, etc.)
- speedometer
- light indicators
- steering wheel play
- horn(s)
- mirrors adjusted and windshield condition
- wipers
- heater and defroster
- safety/emergency equipment
- parking brake
- brake system check (see back side of this page for correct procedure)
- service brake check (see back side of this page for correct procedure)

Note: All drivers are required to complete a brake system check correctly in order to pass their pre-trip inspection. The correct process is listed below according to the vehicles braking system.

BRAKE SYSTEM CHECK FOR HYDRAULIC BRAKES
If the vehicle has hydraulic brakes, with the engine running, apply firm pressure to the service (foot) brake pedal and hold for five seconds. The brake pedal should not move.

BRAKE SYSTEM CHECK FOR AIR BRAKES
If the vehicle has air brakes, you will need to check for leaks (L), warning alarm/signal (A) and for the button (B). This test is commonly referred to as the LAB inspection.

(L) - LEAKS
With a fully charged air system (typically 120 psi), turn off the engine, chock the wheels, release (push in) the parking brake button. Apply firm pressure to the service (foot) brake pedal. Watch the air supply gauge and listen for air leaks. After the initial pressure drop, the loss rate for single vehicles should be no more than 3 psi in one minute. If the air loss rate exceeds that figure, your air brake system will need to be repaired prior to continuing with the skills test.

(A) - ALARM/SIGNAL
Turn the key to the on position. Rapidly apply and release (fanning) the service (foot) brake pedal to reduce air tank pressure. The low air pressure warning signal (light, buzzer, etc.) must come on before the pressure drops to less than 60 psi in the air tank.

(B) - BUTTON
Continue to rapidly apply and release (fanning) the service (foot) brake pedal to further reduce air tank pressure. The parking brake button should pop out when the air pressure falls to the manufacturer's specification (usually between 20 to 40 psi). This causes the spring brakes to come on.

TEST SERVICE (FOOT) BRAKES PRIOR TO OPERATING
If your vehicle has **air brakes**, build up your air pressure to normal operating range (typically 120 psi), release (push in) the parking brake button. Move forward slowly (about 5 mph), and apply the service (foot) brake pedal firmly. Note any vehicle "Pulling" to one side, unusual feel, or delayed stopping action.

If your vehicle has **hydraulic brakes**, move forward slowly (about 5 mph), and apply the service (foot) brake pedal firmly. Note any vehicle "Pulling" to one side, unusual feel or delayed stopping action.

Note: If your vehicle is air brake equipped, you must locate and identify all air brake system components, test your service brakes and correctly perform the LAB in order to pass the air brake portion of the pre-trip inspection.

Note: All drivers may use this aid during their pre-trip inspection test. Be prepared to point to or touch the listed items and explain "what" you would look for.

ENGINE COMPARTMENT

- alternator mounted securely & belt *
- water pump mounted securely & belt *
- air compressor mounted securely & belt *
  * if gear driven, mention to the examiner
- coolant, oil and power steering levels
- leaks and hoses

VEHICLE FRONT

- steering box and steering linkage
- springs and spring mounts
- shock absorber
- brake hose or line
- brake drum or rotor
- tire and rim
- lug nuts and hub oil seal
  If air brake equipped
  - brake hose
  - slack adjustor
  - brake chamber

VEHICLE SIDE

- door and mirror
- fuel tank mounted securely, leaks and cap
- frame and drive shaft
- exhaust
- catwalk and steps

TRACTOR/TRUCK REAR

- air hoses and electrical line

TRAILER FRONT

- header board
- air hoses and electrical line connection

COUPLING DEVICE

Fifth Wheel

- mounting bolts
- locking pins (for slider)
- release arm
- platform
- kingpin & apron

Pintle Hook

- pintle hook
- locking pins, safety latch
- safety chains
- safety chain brackets
- tow bar & tow bar eye

TRAILER SIDE

- landing gear
- reflectors
- frame and deck
- door and hinges

TRAILER REAR AXLE

- springs or air bag
- spring mounts or air bag mounts
- shock absorber/torsion bar
- brake hose or line
- brake drum or rotor
- tires and rim
- spacer
- lug nuts and hub oil seal
  If air brake equipped
  - brake hose
  - slack adjustor
  - brake chamber

TRAILER REAR

- doors and hinges
- splash guards and reflectors

VEHICLE LIGHTS

- headlights (high & low beam)
- front signals and 4-way flashers
- front and side clearance
- rear tail
- rear signals and 4-way flashers
- rear brake and clearance lights

INSIDE VEHICLE

- clutch (depressed) gearshift (neutral)
- all gauges (oil, voltmeter, air/vacuum, etc.)
- speedometer and light indicators
- steering wheel play
- horn(s)
- mirrors adjusted and windshield condition
- wipers, heater and defroster
- safety/emergency equipment
- parking brake
- brake system check (see back of this page)
- service brake check (see back of this page)

Note: All drivers are required to complete a brake system check correctly in order to pass their pre-trip inspection. The correct process is listed below according to the vehicles braking system.

BRAKE SYSTEM CHECK FOR HYDRAULIC BRAKES
If the vehicle has hydraulic brakes, with the engine running, apply firm pressure to the service (foot) brake pedal and hold for five seconds. The brake pedal should not move.

BRAKE SYSTEM CHECK FOR AIR BRAKES
If the vehicle has air brakes, you will need to check for leaks (L), warning alarm/signal (A) and for the button (B). This test is commonly referred to as the LAB inspection.

(L) - LEAKS
With a fully charged air system (typically 120 psi), turn off the engine, chock the wheels, release (push in) the parking brake button and trailer air supply (if the trailer has air brakes). Apply firm pressure to the service (foot) brake pedal. Watch the air supply gauge and listen for leaks. After the initial pressure drop, the loss rate for single vehicles should be no more than 3 psi in one minute and no more than 4 psi in one minute for combination vehicles (if the trailer has air brakes). If the air loss rate exceeds those figures, your air brake system will need to be repaired prior to continuing with the skills test.

(A) - ALARM/SIGNAL
Turn the key to the on position. Rapidly apply and release (fanning) the service (foot) brake pedal to reduce air tank pressure. The low air pressure warning signal (light, buzzer, etc.) must come on before the pressure drops to less than 60 psi in the air tank.

(B) - BUTTON
Continue to rapidly apply and release (fanning) the service (foot) brake pedal to further reduce air tank pressure. The trailer supply button (if the trailer has air brakes) and the parking brake button (all air brake vehicles) should pop out when the air pressure falls to the manufacturer's specification (usually between 20 to 40 psi). This causes the spring brakes to come on.

TEST SERVICE (FOOT) BRAKES PRIOR TO OPERATING
If your vehicle has **air brakes**, build up your air pressure to normal operating range (typically 120 psi), release (push in) the parking brake button (all air brake vehicles) and the trailer air supply button (if the trailer has air brakes). Move forward slowly (about 5 mph), and apply the service (foot) brake pedal firmly. Note any vehicle "Pulling" to one side, unusual feel, or delayed stopping action.

If your vehicle has **hydraulic brakes**, release the parking brake, move forward slowly (about 5 mph) and apply the service (foot) brake pedal firmly. Note any vehicle "Pulling" to one side, unusual feel or delayed stopping action.

Note: If your vehicle is air brake equipped, you must locate and identify all air brake system components, test you service (foot) brakes and correctly perform the LAB in order to pass the air brake portion of the pre-trip inspection.

Section 11: Basic Vehicle Control Skills Test

This section covers:
- Skills Test Exercises
- Skills Test Scoring

Your basic control skills could be tested using one or more of the following exercises off-road or somewhere on the street during the skills test:

- Forward stop.
- Straight line backing.
- Alley dock.
- Parallel park (driver side).
- Parallel park (conventional).
- Right turn.
- Backward serpentine.

These exercises are shown in Figures 11-1 through 11-7.

11.1 Scoring

CROSSING BOUNDARIES

The examiner will score the number of times you touch or cross over a boundary line with any portion of your vehicle. Each encroachment will count as an error.

PULL-UPS

In some of the exercises, the examiner will also score the number of times you stop and change direction or pull-up during the exercise. You will be given instructions prior to the beginning of each exercise.

Note: Wisconsin uses the straight line and curved path (alley dock) backing maneuvers.

11.2 Exercises

FORWARD STOP

You may be asked to drive forward between two rows of cones and bring your vehicle to a complete stop as close as you can to the exercise boundary marked by an end line or set of cones (without going beyond the line or cones). (Figure 11-1.)

Figure 11-1: Forward Stop

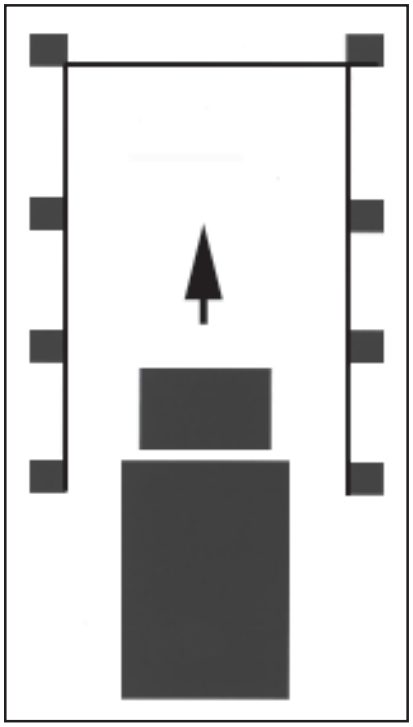

STRAIGHT LINE BACKING

You may be asked to back your vehicle in a straight line between two rows of cones without touching or crossing over the exercise boundaries. (Figure 11-2.)

Figure 11-2: Straight Line Backing

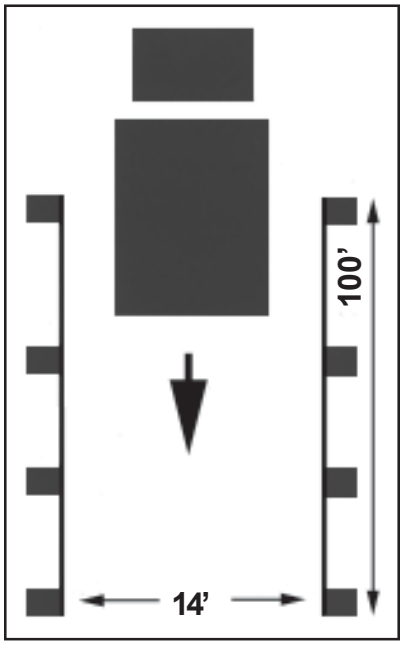

ALLEY DOCK

You may be asked to sight-side back your vehicle into an alley, bringing the rear of your vehicle as close as possible to the rear of the alley without going beyond the exercise boundary marked by a line or row of cones. (Figure 11-3.)

Figure 11-3: Alley Dock

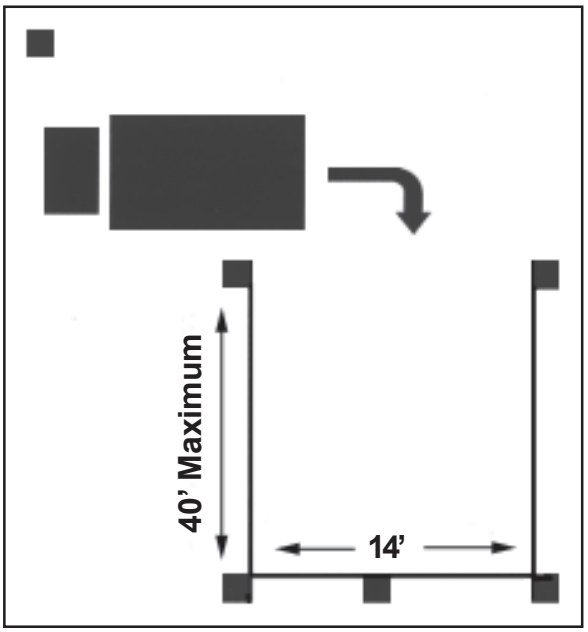

PARALLEL PARK (DRIVER SIDE)

You may be asked to park in a parallel parking space on your left. You are to drive past the parking space and back into it bringing the rear of your vehicle as close as possible to the rear of the space without crossing side or rear boundaries marked by cones. You are to try to get your vehicle (or trailer, if combination vehicle) completely into the space. (Figure 11-4.)

Figure 11-4: Parallel Park (Driver Side)

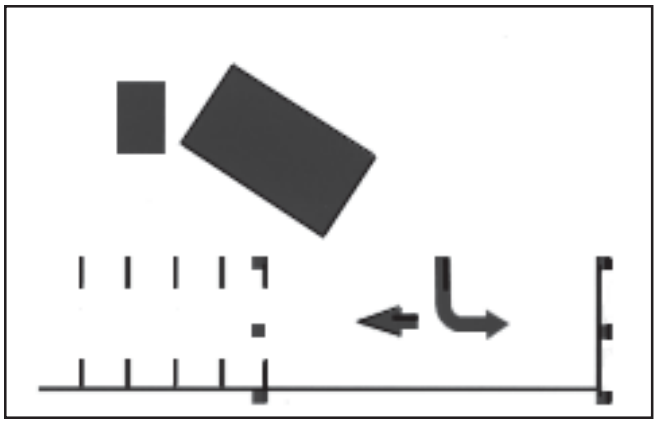

PARALLEL PARK (CONVENTIONAL)

You may be asked to park in a parallel parking space that is on your right. You are to drive past the parking space and back into it bringing the rear of your vehicle as close as possible to the rear of the space without crossing side or rear boundaries marked by cones. You are to try to get your vehicle (or trailer, if combination vehicle) completely into the space. (Figure 11-5.)

Figure 11-5: Parallel Park (Conventional)

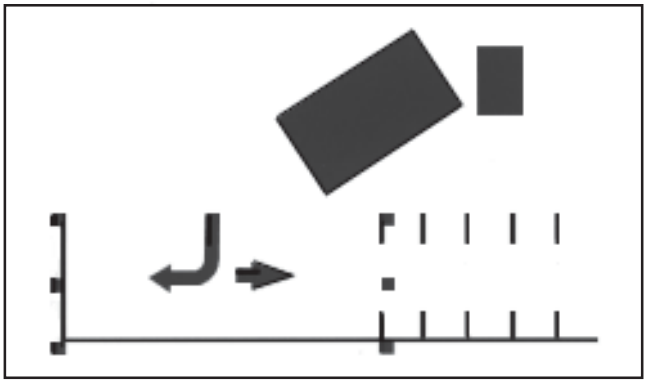

RIGHT TURN

You may be asked to drive forward and make a right turn around a cone. You should try to bring the right rear wheel(s) of your vehicle as close to the base of the cone as possible without hitting it. (Figure 11-6.)

Figure 11-6: Right Turn

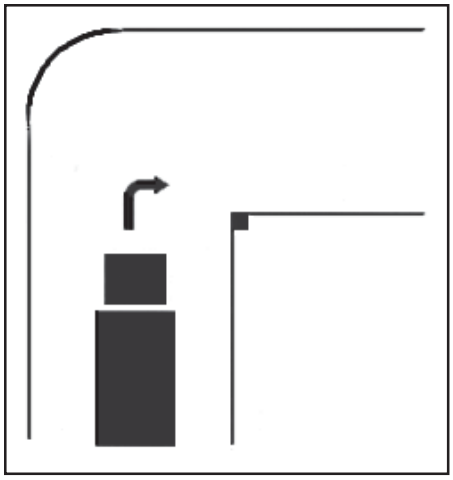

BACKWARD SERPENTINE

You may be asked to back your vehicle through a 3-cone serpentine without touching any cones or crossing over the exercise (side) boundaries marked by cones. (Figure 11-7.)

Figure 11-7: Backward Serpentine

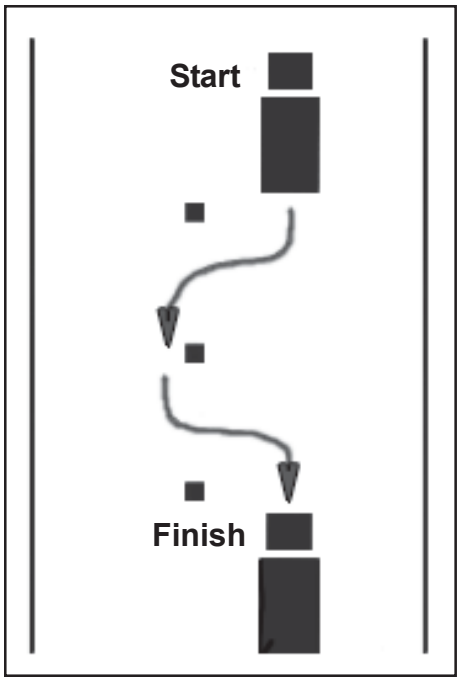

Section 12: On Road Driving Test

This section covers:
- How You Will Be Tested

Note: The examiner will be scoring your skills test using the information supplied in the CDL Skills Test Guide, printed on pages 12-1 through 12-4

You will drive over a test route that has a variety of traffic situations. At all times during the test, you must drive in a safe and responsible manner.

During the driving test, the examiner will be scoring you on specific driving maneuvers as well as on your general driving behavior. You should follow the directions of the examiner. Directions will be given to you so you will have plenty of time to do what the examiner has asked. You will not be asked to drive in an unsafe manner.

If your test route does not have certain traffic situations, you may be asked to simulate a traffic situation. You should do this by telling the examiner what you are or would be doing if you were in that traffic situation.

CDL SKILLS TEST GUIDE

TURNS

APPROACH

- **Traffic check** - Prior to reaching the corner, check the mirrors with head movement to left and right, making eye contact with other drivers and pedestrians.

- **Turn signal** - Turn signals should be activated at least 100 feet prior to the corner. Signaling too early or too late confuses other motorists.

- **Deceleration** - There should be a smooth deceleration by braking gradually, not lugging the engine and downshifting, if necessary. Do not coast either by depressing the clutch too early or putting the transmission into neutral until stopped.

- **Lane**
  - Right Turns - Vehicle should be positioned in the right-most traffic lane and not over lane markings. While making a right turn, you may go over the left lane marking, but only if necessary.
  - Left Turns - Vehicle should be positioned in the left-most (nearest to the center line) traffic lane and not over lane markings - Single turn lane ONLY.
  - Multiple Left Turn Lanes - Vehicle should be positioned in the right hand (outside) traffic lane and not over lane markings.

IF STOP REQUIRED PRIOR TO THE TURN

- **Stop line** - Stop before stop line, crosswalk, or before entering the intersection "curb line" of street.

- **Rollback** - The vehicle should not roll back when stopped.

- **Gap** - Should be able to see the rear tires of the vehicle ahead of you touch the pavement.

- **Wheels straight** - Keep the steering wheel straight until actually starting the turn, especially in left turns. If your vehicle is rear ended, it may be pushed into oncoming traffic.

TURNING

- **Traffic check** - While turning, there should be head movement to the left and right, watching for other drivers and pedestrians.

- **Both hands** - While turning, both hands should be on the steering wheel. The steering wheel can "self-return" as long as you are holding it with both hands.

- **Shifting** - While turning, there should be no shifting gears. Gear change is allowed when starting from a stop while still traveling straight.

- **Speed** - Speed during turns should be smooth, even acceleration and no unnecessary stopping.

- **Wide/short** - Do not cut across lanes unless necessary. Do not force others to stop or backup. Tires should not rub or run over the curb. Rear tires must be within 3 feet of the curb at the closest point during the turn.

COMPLETING TURN

- **Traffic check** - In addition to checking left and right, check the mirror for vehicle path.

- **Correct lane** - Left turns should be completed in the lane closest to the center line and then move right when safe (turning from single turn lane onto multiple lane street/highway). Left turns when multiple turn lanes are available need to be made from the right (outside) turn lane and completed in the appropriate lane (watch the dashed white lines outlining the correct turning path).

**** Completing two or more turns into the wrong lane is a disqualification. ****

- **Signal** - Canceled after completion of turn.

- **Accelerate** - Acceleration should be smooth with no stalling or lugging the engine.

INTERSECTIONS

STOPPED INTERSECTION

- **Traffic check** - Prior to reaching the intersection, check the mirrors with head movement to the left and right, making eye contact with other drivers and pedestrians.

- **Deceleration** - There should be smooth deceleration by braking gradually, not lugging the engine and downshift, if necessary. Do not coast either by depressing the clutch too early or putting the transmission into neutral until stopped.

- **Gap** - Should be able to see the rear tires of the vehicle ahead of you touch the pavement.

- **Stop line** - Stop before stop line, crosswalk, or before entering the intersection "curb line" of street.

- **Rollback** - The vehicle should not roll back when stopped.

DRIVING THROUGH INTERSECTIONS

- **Traffic check** - Check traffic to left and right before entering the intersection and to the rear by checking mirrors. If pedestrians or other traffic is stopped or near the intersection, remove your foot from the accelerator and cover the foot brake. Anticipate the light changing to yellow.

- **Accelerate, Gear** - Accelerate and shift smoothly.

- **Lane** - Remain in traffic lane and do not change lanes while in the intersection.

URBAN/RURAL SECTIONS

- **Traffic checks** - Check mirrors every 8 to 10 seconds.

- **Proper lane** - Keep your vehicle centered in the proper lane and react to situations requiring a lane change or reducing speed.

- **Speed** - Keep up with traffic, but do not exceed the speed limit.

- **Following distance** - Stay one second, for every 10 feet of vehicle length, behind the vehicle in front of you and add one second if you are operating over 40 mph.

LANE CHANGE

- **Traffic check** - Check traffic before, during and after the lane change.

- **Signal** - Turn signal on before the lane change and cancel signal after the vehicle is completely into new lane.

- **Smooth change** - Change lanes smoothly and not in an intersection.

BRIDGE/UNDERPASS

- **Weight/Clearance** - Know the weight allowed on a bridge or the clearance of an underpass.

CURVE

- **Traffic check** - Check traffic that may be affected by the path of your vehicle.

- **Speed, Lane** - Maintain a proper safe speed while keeping the entire vehicle within the traffic lane.

RAILROAD CROSSING

APPROACH

- **Traffic check** - As you approach the tracks, check the mirrors with head movement to the left and right to ensure other traffic sees you are stopping.

- **4-Ways, Stop** - All placarded vehicles, school buses and motor buses carrying passengers, must stop 15 to 50 feet from the nearest rail. Activate 4-way flashers 100 feet before the tracks to warn other drivers you are stopping. Use the right most lane for the stop.

AT CROSSING

- **Foot Brake** - Depress the foot brake so your vehicle does not roll backward or forward in a dangerous manner.

- **Door** - Open the door (school bus and human service vehicle) or van service window.

- **Train check** - Check left and right (up and down the track) for an approaching train.

CROSSING TRACKS (RESUME)

- **Traffic and train check** - Recheck the mirrors with head movement to left and right and recheck the tracks for an approaching train.

- **Gear** - No changing gears while the vehicle is crossing the tracks and no stopping on the tracks.

- **Door** - Close the service door when the front wheels cross the first set of tracks.

- **4-Ways** - Turn 4-ways off after your vehicle has resumed normal speed.

EXPRESSWAY

MERGE ON

- **Traffic check, Signal, Gap** - Check traffic, signal 100 feet before entering and allow a safe gap.

- **Smooth merge** - Merge smoothly and safely without crossing painted white lines.

- **Signal off** - Cancel the signal after entering the expressway.

STRAIGHT AHEAD DRIVING

- **Traffic check** - Check mirrors every 8 to 10 seconds.

- **Proper lane** - Keep your vehicle centered in the proper lane and react to situations requiring a lane change or reducing speed.

- **Speed** - Keep up with traffic, but do not exceed the speed limit.

- **Following distance** - Stay one second, for every 10 feet of vehicle length, behind the vehicle in front of you and add one second if you are operating over 40 mph.

LANE CHANGES (Same as LANE CHANGE in URBAN/RURAL)

EXIT

- **Traffic check** - Prior to reaching the exit, check the mirrors with head movement to the left and right.

- **Signal** - At least 100 feet before the exit.

- **Lane** - Enter smoothly at the start of the exit lane.

- **Decelerate** - Smooth deceleration on the exit ramp, (brake gradually, not lug the engine and downshift if necessary).

- **Ramp speed** - Maintain a safe speed (watch for warning signs)

- **Gap** - Maintain proper spacing with traffic when exiting.

- **Signal off** - Cancel the signal when the vehicle is on exit ramp.

HILL START/STOP

***APPROACH* (Same as STOPPED INTERSECTION)**

- **Turn signal** - Turn signals should be activated at least 100 feet prior to pulling over for a stop.

STOPPED

- **Parallel** - Vehicle is completely in the right most lane, parallel with the curb, gravel, or road edge.

- **4-ways on** - Turn signal lights off and 4-ways on.

- **Parking brake** - Set the parking brake(s).

RESUME

- **Traffic check** - Check traffic before and while pulling away from curb.

- **4-ways off, signal on** - Turn 4-way flashers off and turn signal on, before pulling out.

- **Pulling away** - Release the parking brake; do not stall engine or rollback. Accelerate smoothly.

MOUNTAIN GRADE

DRIVING UP

- **Traffic check** - Check mirrors to the rear, before, during and after moving to the right. Scan mirrors while climbing the grade.

- **Signal** - Activate turn signal at least 100 feet before moving to the right lane.

- **Proper gear** - Use proper gear and downshift, if necessary.

- **Keep right, 4-ways** - Be in the right most traffic lane using 4-way flashers.

TOP OF GRADE

- **Brakes** - Check service (foot) brakes before starting down the mountain.

- **Proper gear** - Select the proper gear before starting down the mountain and NO shifting going down.

DRIVING DOWN

- **Traffic check** - Check mirrors with head movement to the left and right while driving down.

- **Proper braking** - Use intermittent, moderate applications (snubs) if needed to control speed. Apply the brakes for 3 seconds to reduce speed to 5 mph under the safe speed.

- **4-Ways off** - Turn 4-ways off after reaching the bottom of the grade. Signal to the left, check traffic and safely merge to the left if your lane is ending.

BACKING GUIDELINES

POSITIONING

- **Traffic checks** - Check mirrors with head movement to the left and right.

- **Signal, 4-Ways** - Activate turn signal 100 feet before positioning to back up. Turn signal off and activate 4-way flashers.

BACKING

- **Traffic check** - Check traffic in BOTH mirrors while backing.

- **Pull up** - Is scored if you need to pull forward while performing the straight line backing maneuver. The first pull forward is not scored while performing the curved path (alley dock) maneuver. If you need to pull forward two or more times, it is scored.

- **Speed** - Back at a slow speed (under 5 mph).

- **Boundary** - Do not cross over boundaries (cones, painted lines, marked traffic lanes).

RESUME

- **Traffic check** - Check mirrors with head movement left and right.

- **4-Ways off, Signal** - Turn 4-ways off and turn signal on to return to the traffic lane.

SCHOOL BUS DISCHARGE (RURAL)

APPROACH AND STOP

- **Traffic checks** - Scan the road ahead and behind the bus with mirror checks, before activating red flashing lights.

- **Red flashing warning lights** - Activate the red flashing lights at least 100 feet before the stop.

- **Traffic recheck** - Check mirrors and traffic ahead to ensure other drivers see and react to the red lights.

- **Stop arm** - Extend stop arm after the bus is stopped.

- **Gear** - Transmission should be placed in neutral (including automatic transmissions). Depress the foot brake to prevent the bus from rolling.

DISCHARGE

- **Inform students** - where to wait (10 feet in front of the bus), signal to cross the road, signal not to cross the road (in case of danger), and, for students not crossing the road, to move immediately away from the bus.

STUDENTS EXIT

- **Traffic check** - Must check all traffic (especially right outside mirror) prior to opening the door.

- **Door** - Open door after re-checking traffic.

- **Students** - Count all students leaving bus, check students not crossing (to be safely away from the bus) and check students that are waiting for your signal to cross the road.

CROSSING ROAD

- **Traffic check** - Must check all traffic (especially left outside mirror and oncoming traffic) before motioning students to cross the road.

- **Students** - Signal students to cross when safe. After students have safely crossed the road, account for all students leaving the bus (count students that crossed and students not crossing the road.)

RESUMING

- **Traffic check** - Check crossover mirror(s).

- **Stop arm, door** - Close the door completely, turn off the red warning lights, check traffic and accelerate smoothly.

GENERAL DRIVING BEHAVIOR

TRAFFIC CHECKS - 5 additional points scored when the driver does not check traffic properly 5 or more times.

SHIFTING/GEARS - 5 additional points scored when the driver does not shift properly (uses clutch, misses/clashes gears) 5 or more times.

SIGNALS, 4 Ways - 5 additional points scored when the driver does not use signals or 4-ways properly 5 or more times.

COASTING, DECELERATION & ROLL BACK - 5 additional points scored when the driver coasts, does not decelerate smoothly or rolls back 24 inches or less (includes selecting reverse gear in error) 5 or more times.

IMMEDIATE DISQUALIFICATION

ACCIDENT - Is involved in any accident the driver could have prevented or contacts any fixed object or pedestrian.

DANGEROUS ACT - Driver almost causes an accident. This includes:

- Forcing someone else to take immediate action.
- Examiner had to take action to avoid an accident.
- Backing up because he/she took a turn too short.
- Drives over a curb.
- Not checking traffic or not slowing down when going through an uncontrolled intersection.
- Rolls back more than 24 inches.
- Has both hands off the steering wheel for an extended period of time.

LAW VIOLATIONS - Violating any traffic law. This includes, but is not limited to:

- Speeding.
- Failing to stop for a stop sign or traffic signal.
- Making one turn entirely from the wrong lane.
- Turning into the wrong lane (two times) at the completion of a turn.
- Failing to signal properly, affecting other traffic.

Other Information

The Department of Transportation intends for the products and services it offers to be accessible to all. If you need accommodations or do not understand any part of this publication, please contact any Division of Motor Vehicles (DMV) Service Center.

Note: Information in this and other handbooks and manuals published by the Division of Motor Vehicles is not all inclusive and is subject to change due to law changes. For the latest information contact a DMV Service Center.

Wisconsin Department of Transportation
Division of Motor Vehicles
4802 Sheboygan Avenue
Madison, Wisconsin 53702

BDS 115 8/2004